CITY OF
SURREY
ENGINEERING DEPARTMENT

CONTRACT NUMBER:	6021-004-11
CONTRACT TITLE:	COLEBROOK PUMP STATION REPLACEMENT
ADDENDUM NUMBER.:	2
ADDENDUM ISSUE DATE:	2022-10-19

Tenderers are advised that Addendum No. 2 to *Contract* 6021-004-11 is hereby issued by the *Owner*. This addendum shall form part of the *Contract Documents* and is to be read, interpreted and coordinated with all other parts. The following revisions supersede the information contained in the original *Contract Documents* and preceding addendums. The cost of all *Work* herein shall be included in the Unit Prices tendered in the *Schedule of Quantities and Prices*.

GENERAL

1. The Tender Closing Date and Time has been changed to:

   November 2nd 2022 at 14:00 PST

2. No addenda will be issued less than 72 hours prior to the Tender Closing Date and Time.

3. The *Owner* is obtaining a designated substances report for the existing building that will be demolished as part of the *Work*. The requirement for the *Contractor* to obtain their own designated substances report has been removed from SSP 02 41 00. The designated substances report will be provided to tenderers in and Addendum if available and practical prior to the Tender Closing Date or will be provided after the Notice of Award to the *Contractor*.

4. This Addendum is comprised of the following attached pages:

a. Revised Supplementary General Conditions (Project) and Specifications (Project)
b. Questions and Answers
c. Contract Drawings:
   i) New HVAC Drawing, ME01
   ii) Revised Drawings
      (1) E01
      (2) E02
      (3) E04
      (4) E09
      (5) E011

SUPPLEMENTARY GENERAL CONDITIONS (PROJECT)

5. SGCP 4.6.9 - Coordination With Landowner

Add the following sentence to the end of the first paragraph:

> The *Contractor* shall maintain a sufficient access width on the dyke fronting the pump station/forebay of minimum 14 feet to accommodate the width of farm equipment.

SUPPLEMENTARY SPECIFICATIONS (PROJECT)

6. SSP 02 41 00 – Demolition

Delete Paragraph 1.5.1

7. SSP 26 50 00 - Lighting (revised specification attached):
   a. Removed built-in photocell requirement from 2.1.1 Type A Luminaires

8. 32 93 01 Planting of Trees, Shrubs, and Ground Covers

> Paragraph 3.11.4
>
> Delete the last sentence and replace with:
>
> After Total Performance the Contractor is responsible for work and regular maintenance for the 1 year guarantee / maintenance period.
>
> Add Paragraph 3.11.5:
>
> Standard vegetation maintenance tasks include maintaining a 30-cm radius weed-free zone around each container-stock plant to reduce below-ground competition for water and nutrients, replacing mulch as needed, supplemental

irrigation as needed (typically 2 gal per plant, two times per month July–September unless soil moisture remains adequate to support planted trees and shrubs), and replacing dead stock. The Contractor is responsible for replacing dead stock (trees and shrubs) to restore or maintain 100% survival for the guarantee / maintenance period.

QUESTIONS & ANSWERS:

Q1: Drawing C15 includes a detail for "Typical Backfill Type "D" (North and East of pump station replacement construction zone)", but on Drawing C12 that area isn't shown. What should bidders assume for pricing purposes for this area?

A1: This is *Optional Work* for native re-vegetation as clarified in Addendum #1. Native re-vegetation will only be required if the *Contractor* disturbs an area of native vegetation or shrubs to facilitate the *Work*. The *Contractor* must obtain approval prior to disturbing vegetation along Peacock Brook and use flagging tape or snow fence to demarcate shrubby vegetation that does not need to be disturbed during the course of the Work.

Potential areas that may result in the need for new native plantings if disturbed by the Contractor include the northern extent of the forebay (i.e., where Peacock Brook widens into the forebay) only for that portion of the forebay that is currently occupied by shrubs (mostly invasive blackberry). Restoration should be with native plants on the disturbed banks of the forebay where it slopes down to the water.

Q2: Are we allowed to place crane matts instead of gravel for the temporary access road?

A2: No.

Q3: What is the thickness of the plywood which goes on top and below the joists?

A3: The sheathing on top of and below the joists is to be ½" D Fir plywood. GWB is attached to the lower sheathing as indicated on the Architectural drawings.

Q4: Can you confirm reinforcing requirements for the 1500mm blockout or embedded pipe for the discharge lines shown on Section 1 on drawing C17?

A4: If the pipe spool including the thrust ring is cast into the wall at the time of the wall pour, the trim reinforcement shown in Section E (should read D), of drawing S4.2 for the 1500mm block out would surround the pipe spool so that at least two horizontal and two vertical continuous bars are placed within the exposed thrust ring width on each side.

If the square 1500 mm blockout method is used, then the keyways and additional block out reinforcement are required as shown on Section E (should read D), of

drawing S4.2. In addition, bars drilled and epoxied into the blockout exposed wall face to match two zones of vertical and horizontal wall reinforcing are required, as well as additional dowels to match trim bars added closer to the spool.

Q5: Would Surrey and the Ministry of Transportation entertain a nighttime slow lane closure of Highway #99 at the Serpentine River Bridge to drop-off and later pickup cranes & other large materials?

A5: The City of Surrey has previously inquired about this access point with MoTHI but was unable to secure access from the Ministry. The Contractor may contact MoTHI to inquire about using the highway as a potential access point for the Work. The City of Surrey would be supportive of the Contractor using this location as a secondary access route upon approval by MoTHI.

Q6: Are there any geotechnical concerns regarding the permanent piles during the extraction of temporary sheet piles?

A6: This will depend on the final layout, design and removal methodology of the temporary piles which are designed by the Contractor. However, generally there not expected to be adverse effects, as the temporary sheet piles are expected to be a reasonable distance away from permanent sheetpiles. Where close, interaction cannot be avoided but is not expected to be detrimental if best practices and mitigation measures are employed. The Contractor must submit a temporary sheetpile layout and removal methodology for review and comment by the Contract Administrator with regards to the permanent sheetpiles.

Q7: Lighting specification 26 50 00 shows type C fixture, this is not shown on the drawings. Please confirm if fixture Type C is required.

A7: the Type ‘C’ fixture is shown on drawing E11 as ‘150W LED Floodlight’ and is mounted to the SCADA antenna mast.

Q8: Drawing C3.10 shows timber piles supporting the new outlet structure but did not provide any details. Please confirm that timber piles are required at the outlet structure. If so, please provide details for the timber piles.

A8: Yes timber piles are required at the outlet structure. Refer to contract drawings C1.00 and C1.02 issued with Addendum #1.

Q9: Are we permitted to temporarily use the existing dyke road for heavy equipment mobilization to gain access to the site? If so, what are the load restrictions for the existing dyke?

Q9: The dyke is under a contract with Delta Aggregates Ltd (DAL) until 2024. Use of the dyke will need to be coordinated between the Contractor for the pump station and DAL.

Q10: Is the integral photocell specified in the type A luminaires going to interfere with the exterior lighting control system specified on page E04

A10: Refer to revised specifications. The Photocell requirement has been removed from the Type A luminaire.

Q11: Are there specifications for the genset receptacle?

A11: Refer Revision 4 of E01 included with this addendum.

Q12: Can you please get information on the bearing capacity of the existing dyke structure?

A12: The Contractor is responsible for temporary works during construction. This includes, but is not limited to, allowable bearing resistance, the stability of the dike or sheet piles when subject to construction loads, etc. The minimum acceptable Factor of Safety for dike stability for temporary works during construction is 1.3.

CONTRACT DRAWINGS

The following new contract drawings are issued and included with this addendum.

- ME01 “Mechanical Layout and Specifications”, Dated October 16, 2022 Revision 1

The following contract drawings are revised and included with this addendum:

- E01 “Single Line Diagram & MCC Layout” Dated September 17, 2022 Revision 4
- E02 “Control Panel & Bill of Materials” Dated September 17, 2022 Revision 4
- E04 “120V & 24V Power Distribution” Dated September 17, 2022 Revision 4
- E09 “Equipment Layout” Dated September 17, 2022 Revision 4
- E11 “Equipment Layout” Dated September 17, 2022 Revision 4

END OF ADDENDUM

SYMBOL SCHEDULE

AP	ACCESS PANEL	MD-1	EQUIPMENT TAG
	DUCTWORK	EG / 400X250 / 300	GRILLE TAG / SIZE / L/S
	FAN	UH-1 / 3 kW / 208/1/60	ELECTRIC HEATER TAG / KILLOWATTS / VOLTAGE
	FLEXIBLE CONNECTION	H	HUMIDISTAT
	DOMESTIC HOT WATER	FE	FIRE EXTINGUISHER
	DOMESTIC COLD WATER	T	THERMOSTAT / TEMPERATURE SENSOR LOCATION
	SANITARY BELOW GRADE	T_R	REVERSE ACTING THERMOSTAT
V	VENT PIPING	$	WALL SWITCH
PG	PROPANE PIPING		FLOOR DRAIN
	PROPANE PRV		BALL VALVE
	BALANCING DAMPER	T	CLEANOUT
M	MOTORIZED DAMPER		CIRCUIT BALANCE VALVE
	PUMP	A	AQUSTAT
UC	UNDERCUT DOOR BY 20mm		DOOR GRILLE
CL	CHLORINE DETECTOR		

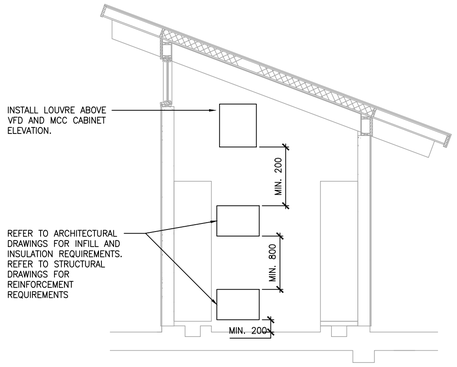

3 ME-01 **INTERIOR WALL ELEVATION**

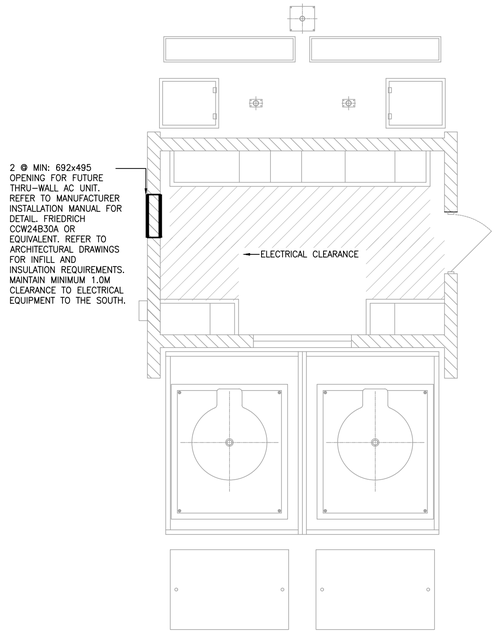

1 ME-01 **LOWER LEVEL - PUMP HOUSE**

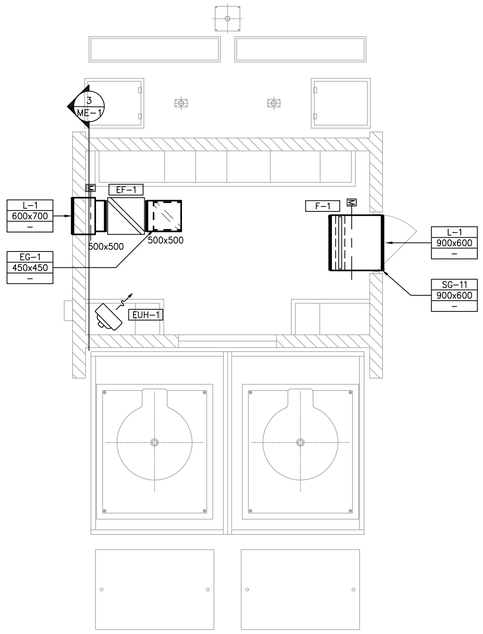

2 ME-01 **UPPER LEVEL - PUMP HOUSE**

SPECIFICATION:

1. GENERAL

.1 Review all associated documents prior to submitting bids. report any discrepancies to the consultant.

.2 Pay for all permits, applicable licenses and submit drawings to the authority having jurisdiction.

.3 Guarantee all work for a period of twelve months from the date of completion.

.4 Verify and inform the consultant of any conflicts in accessibility and routing of ductwork and piping before proceeding with the work.

.5 Install ductwork in accordance with the requirements of the BC building code, the BC plumbing code, local, provincial, and federal regulations. All work shall be tested to comply with the requirements of all related codes.

.6 Unless otherwise specified, all materials apparatus required for the work shall be new, of first class quality, shall be furnished, delivered, erected, connected, and finished in every detail, and shall be selected and arranged so as to fit properly into the building space. Where no specific quality of material is given, a first class standard article as approved by the consultant shall be furnished.

.7 All mechanical equipment suspended from the building structure shall be suitably supported and isolated in accordance with the manufacturers requirements. All equipment shall be seismic restrained to meet the seismic section of the BC building code. Provide letters of assurance.

.8 Keep a set of prints on site to record the "As Built" condition. Update AutoCAD files with "As Built" information & submit files & one set of originals to the consultant upon completion of the work for inclusion with the maintenance manuals.

.9 Provide three copies of the maintenance manuals for all equipment installed. Include specifications for equipment, manufacturer's installation, operation and maintenance information, and source of supply. Include "As Built" drawings.

.10 Submit shop drawings for all heating & ventilating equipment.

.11 The commissioning of the mechanical systems to include all testing, air balancing and system verification to ensure full operation. Report to be inserted into maintenance manual.

.12 The air balancing shall be in general accordance with the AABC national standards & ASHRAE standards.

.13 Supply 2–10lb A,B,C type ULC listed dry chemical fire extinguishers as indicated.

.14 Air balance the exhaust air system to within +10% / –0% of listed volumes.

2. INSULATION

.1 Internally insulate all intake & exhaust air plenums behind louvers.

.2 Internal duct insulation is 25mm thick UL listed 3.0 lb/cu ft. fiber glass semi rigid type with black coated mat on air stream surface. Minimum thermal conductivity of 0.039 w/m–c°

.3 Provide 25mm thick mineral fibre insulation on all domestic water piping. All exposed water piping to be covered with PVC jacket & elbows.

.4 Insulation to comply with CGSB 51, GP 9, 10 & 11 and be installed in accordance with BCICA standards.

3. DUCTWORK

.1 Construct all ductwork in pump and electrical room from galvanized steel. Construct and install ductwork in accordance with SMACNA standards.

.2 Construct all ductwork in chlorine room from 304 or 316 stainless steel. Construct and install ductwork in accordance with SMACNA standards.
.1 All support hangers, clips, balancing dampers and ductwork to be manufactured from the same marerial and have the same finish.

.2 Seal all ductwork with multipurpose water base high velocity duct sealer.

.3 Round elbows shall be five piece slip joint, 1.5 centerline radius.

4. EQUIPMENT

.1 Install all equipment in accordance with manufacturer's recommendations.

.2 Install all insulation in accordance with BCICA standards.

5. CONTROLS

.1 Division 26 00 00 (Electrical) will provide all necessary control wiring and components to provide a complete functional control system.

.2 All exposed control wiring to run in conduit.

.3 Thermostat and fan switch locations shall be confirmed with consultant prior to installation.

.4 Damper actuators shall be line voltage.

6. SEQUENCE OF CONTROL

.1 Exhaust fan EF-1 to be controlled by two reverse acting thermostat. First stage to come on when room temperature exceeds 16°C and the second stage to come on once the room exceeds 21°C

.2 Unit heater EUH-1 to be controlled by a 4-channel digital HVAC controller for automatic control of both stages of the cooling fan, as well as the heater. HOA switches to be install for both the cooling fan and heater per request of City. The system is to be set to maintain a set temp of 10 Degrees Celsius

.3 Motorized damper MD-1, MD-2 for the ventilation systems shall operate normally-closed, energize to open. Dampers are to automatically close when there is a power failure.

.4 Motorized dampers MD-1 & MD-2 to be interlocked with EF-1.

7. EQUIPMENT SCHEDULES

MOTORIZED DAMPERS MD-1, MD-2.
Dampers are Ventex 3965 BF or other approved. Counterbalanced, extruded aluminum, low leakage, insulated, broken fame. provide Belimo line voltage (120/1/60) actuators to control dampers.

EXHAUST FANS
EF-1 Greenheck SQ-140-VG 1900 CFM @ 0.7" ESP high speed, 900 @ 0.4 ESP low speed 120/1/60, ¾ HP, veri-green motor, 11.9/5.6 sones
Controls: Greenheck 2-speed assembly.

FILTERS (F-1)
Filters to be Camfil FARR 30/30 (2@450x600x50) medium efficiency with minimum rating of MERV 8. Provide a 16 gauge galvanized steel frame with gasketed filter seal flange. Frame c.w bottom access for slide out filter removal. Filter access door to be constructed with full length piano hinge c/w gasket seal around door edge & cam locking device. Provide two spare sets of filters.

GRILLES/LOUVERS
EG-1 Krueger EG5/-x-/F22/-/01/00//44.

SG-1 Krueger EG5/-x-/F22/-/01/00//44.

ELECTRIC HEATERS
EUH-1 Ouellet electric unit heater OAS02000 @ 2,000 watts @ 240/1/60, Fan motor HP 1/30, built-in transformer for fan motor, c/w wall mounted 24 volt thermostat, transformer & relays.

LEGAL DESCRIPTION

SURVEY BENCHMARK

REV.	DATE	DESCRIPTION	BY
5			
4			
3			
2			
1	OCTOBER 16, 2022	ISSUED FOR TENDER	MM

"I RICHARD CORRA A PROFESSIONAL ENGINEER, IN GOOD STANDING IN AND FOR THE PROVINCE OF BRITISH COLUMBIA, HEREBY CERTIFY THAT THE WORKS AS HEREIN SET OUT ON THE ATTACHED DRAWINGS HAVE BEEN DESIGNED TO GOOD ENGINEERING STANDARDS AND IN ACCORDANCE WITH THE LATEST EDITION OF THE CITY OF SURREY DESIGN CRITERIA MANUAL, THE MMCD, AND THE CITY OF SURREY STANDARD CONSTRUCTION DOCUMENTS (GENERAL CONDITIONS, SUPPLEMENTARY SPECIFICATIONS AND SUPPLEMENTARY STANDARD DRAWINGS), ADOPTED BY THE CITY OF SURREY."

CONSULTANT

ROCKY POINT ENGINEERING LTD.
Vancouver • Langley • Victoria • Nanaimo • Kelowna • Kamloops • Nelson
Langley Office
208 - 20171 92A Avenue
Langley, BC V1M 3A5
www.rpeng.ca
Tel: (604) 888-7779
Fax: (604) 888-7719

CITY OF SURREY

CLIENT
CITY OF SURREY
13450 – 104 AVE. SURREY, B.C., CANADA V3T 1V8

COLEBROOK DRAINAGE P.S. REPLACEMENT
MECHANICAL
LAYOUT AND SPECIFICATIONS

SEAL

SCALE: AS SHOWN
DESIGNED MM
DRAWN MM
REVIEWED RC

DATE (YYYY.MM.DD) 2022.10.03
CONSULTANT PROJ. NO. 22442-M
DWG. NO. **ME01**
REV. 1

SURREY PROJECT NUMBER **6024-004**
SURREY DRAWING NUMBER

Oct 17 2022 – 11:47am R:\RPE PROJECTS\P_2022\COLEBROOK_SURREY PUMPHOUSE_ELECTRICAL ROOM_22442-M\04 Drawings\10 Working Drawings\Mechanical.dwg/ME-01 max.mcdiarmid

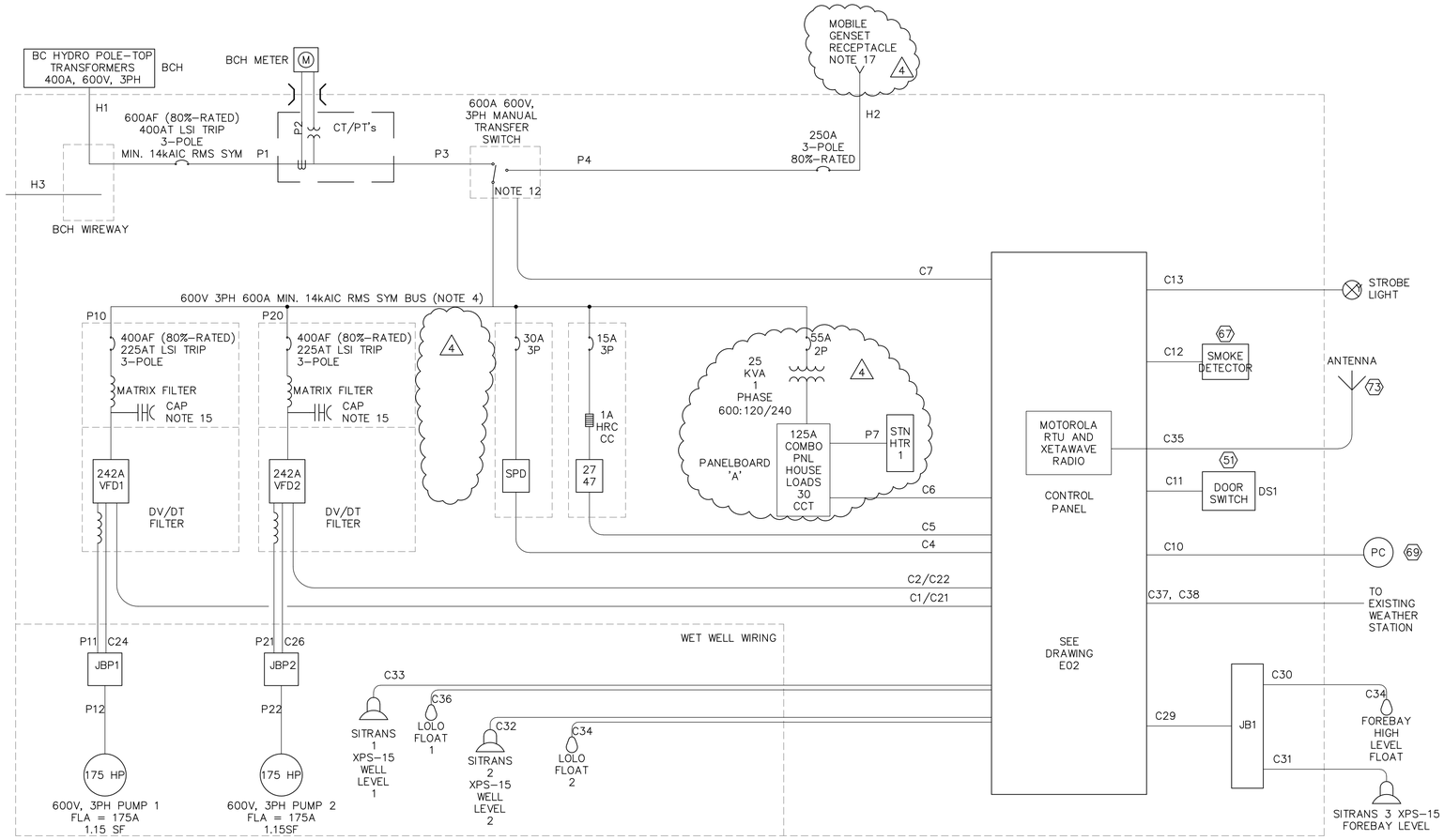

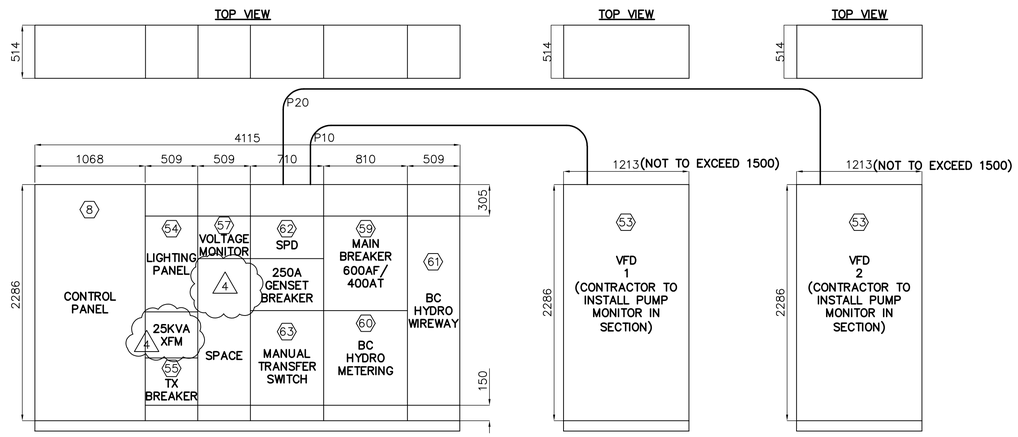

* ALL CONDUITS TO CONTAIN APPROPRIATELY SIZED BOND CONDUCTOR NOT SHOW IN THE TABLES FOR CLARITY. SIZING BASED ON COPPER CONDUCTORS.

CONTROL CABLE/CONDUIT TABLE*

NO.	FROM	TO	CONDUIT / WIRE SIZE	NOTES/WIRE #'S
C1	CONTROL PANEL	VFD1	CABLE TRAY / 10C14AWG	
C2	CONTROL PANEL	VFD2	CABLE TRAY / 10C14AWG	
C4	CONTROL PANEL	SURGE PROTECTION DEVICE	CABLE TRAY / 6C14AWG	
C5	CONTROL PANEL	VOLTAGE MONITOR	CABLE TRAY / 6C14AWG	
C6	CONTROL PANEL	LIGHTING PANEL	CABLE TRAY / 4C14AWG	
C7	CONTROL PANEL	MANUAL TRANSFER SWITCH	CABLE TRAY / 6C14AWG	
C10	CONTROL PANEL	PHOTOCELL	25øRPVC / 4C14AWG	IN CONCRETE
C11	CONTROL PANEL	DOOR SWITCH	25øEMT / 2C14AWG	
C12	CONTROL PANEL	SMOKE DETECTOR	25øEMT / 2C14AWG	
C13	CONTROL PANEL	STROBE LIGHT	25øEMT / 2C14AWG	
C21	CONTROL PANEL	VFD1	CABLE TRAY / 4PR16AWG SHD	
C22	CONTROL PANEL	VFD2	CABLE TRAY / 4PR16AWG SHD	
C24	VFD1	JBP1	RPVC SLEEVE/10C#14 TECK	
C25	JBP1	PUMP NO. 1	25øRPVC / VENDOR SUPPLIED (CONFIRM WITH VENDOR)	
C26	VFD2	JPB2	RPVC SLEEVE/10C#14 TECK	
C27	JBP2	PUMP NO. 2	25øRPVC / VENDOR SUPPLIED (CONFIRM WITH VENDOR)	
C29	CONTROL PANEL	JB1	25øRPVC / 6C14AWG + 2PR16AWG SHD	IN CONCRETE
C30	JB1	FOREBAY HIGH LEVEL FLOAT	25øEMT / BY VENDOR	
C31	JB1	LEVEL ELEMENT (FOREBAY LEVEL)	25øEMT / BY VENDOR	
C32	SITRANS 2 (NOTE 16)	LEVEL ELEMENT (WELL LEVEL 2)	25øRPVC / BY VENDOR	IN CONCRETE
C33	SITRANS 1 (NOTE 16)	LEVEL ELEMENT (WELL LEVEL 1)	25øRPVC / BY VENDOR	IN CONCRETE
C34	CONTROL PANEL	LO LO FLOAT SWITCH 1	25øRPVC / BY VENDOR	IN CONCRETE
C35	CONTROL PANEL	ANTENNA	53øRGS MAST / LMR400	
C36	CONTROL PANEL	LO LO FLOAT SWITCH 2	25øRPVC / BY VENDOR	IN CONCRETE
C37	CONTROL PANEL	WEATHER STATION	25øRPVC	IN CONCRETE, CAPPED FOR FUTURE USE
C38	CONTROL PANEL	WEATHER STATION	25øRPVC	IN CONCRETE, CAPPED FOR FUTURE USE
C39	CONTROL PANEL	SECURITY CAMERA CONTROL BOX	25øEMT / 2C14AWG	

NOTES:

1. MAXIMUM OF 2 PUMPS RUNNING AT ANY TIME ON BC HYDRO SERVICE. MAXIMUM 1 PUMPS ON GENSET.
2. COMPLETE MCC/PDC ASSEMBLY MUST MEET REQUIREMENTS OF CEC.
3. COMPLETE MCC/PDC ASSEMBLY MUST BE CSA CERTIFIED, COMPLETE WITH CSA APPROVED STICKER.
4. COMPLETE ASSEMBLY MUST HAVE MINIMUM 14kA RMS SYMMETRIC FAULT CURRENT RATING.
5. MCC TO FEED ENCLOSURE ON OPPOSITE WALL FROM MCC BUS TAP. FEEDER CONDUCTORS SHALL NOT EXCEED 7.5m IN LENGTH.
6. USE TWO 78mm RPVC CONDUITS. ENGINEER TO WITNESS INSTALLATION PRIOR TO PERMANENT INSTALLATION.
7. MCC LAYOUT IS SUGGESTED. CONFIRM MCC DIMENSIONS WITH SUPPLIER. DO NOT EXCEED DIMENSIONS INDICATED.
8. BCH METERING SECTION TO BCH STANDARDS AND REQUIREMENTS.
9. BRANCH CIRCUIT BREAKERS TO BE EQUIPPED WITH CURRENT AND TIME ADJUSTMENTS.
10. ALL GROUNDING AND BONDING TO CEC.
11. EQUIPMENT TO BE SHOP TESTED PRIOR TO SHIPPING TO SITE. CITY'S REPRESENTATIVE AND ENGINEER TO WITNESS SHOP TESTING.
12. MANUAL TRANSFER SWITCH TO HAVE A MINIMUM OF AUXILLARY CONTACT INDICATING THE CURRENT SUPPLY SOURCE (BCHYDRO OR GENERATOR)
13. CAPACITORS TO BE "ONLINE" ONLY ONCE VFD IS UP TO SPEED.
14. JB TO BE MOUNTED ON RAILING OR STRUCTURE WALL (TO BE CONFIRMED ON SITE). RUN RPVC IN CONCRETE SLAB TO ELECTRICAL BUILDING.
15. SEE DWG E02 FOR BILL OF MATERIAL ITEMS.
16. PRE-SERVICING SHALL BE INSTALLED FOR FUTURE 600A UNDERGROUND BC HYDRO SERVICE. 2x 103mm SERVICE CONDUITS SHALL BE INSTALLED FROM THE MCC BC HYDRO WIREWAY, OUT PAST THE SHEET-PILE WALL AND CAPPED FOR FUTURE USE. THE PORTION OF THE CONDUITS WITHIN THE PUMP CHAMBER SHALL BE CONCRETE ENCASED. CONDUITS SHALL BE INSTALLED WITH 900mm COVER PER BC HYDRO STANDARDS.
17. THE GENERATOR RECEPTACLE IS 400A, 4 POLE (4 WIRE + BOND) WITH MALE PINS (REVERSE-PINNED, OPTION S22), ROTATED INTERIOR (SPECIAL POLARITY, OPTION S4) & SPRING DOOR. CROUSE-HINDS "ARKTITE" SERIES, CAT. #AREX40418 C/W 'AJ' BACKBOX & ANGLE ADAPTER.

    AN ENGRAVED STAINLESS STEEL NAMEPLATE SHALL BE INSTALLED ON THE BUILDING EXTERIOR DIRECTLY ABOVE THE RECEPTACLE AND SHALL READ AS FOLLOWS: "GENERATOR RECEPTACLE – 347/600 VAC, 3 PHASE, 4 WIRE + BOND, 250A MAXIMUM".

POWER CABLE/CONDUIT TABLE*

NO.	FROM	TO	CONDUIT & WIRE SIZE	NOTES/WIRE #'S
H1	SERVICE MAST WEATHERHEADS	400AT MAIN BREAKER	2x 63ø RGS MASTS / 2x 4C 3/0	
H2	MOBILE GENERATOR RECEPTACLE	250A MOBILE GENSET BREAKER	4C 250MCM	PARALLEL CABLING OK
H3	UNDERGROUND PRE-SERVICING	BC HYDRO WIREWAY	2 x 103mm RPVC	EMPTY FOR FUTURE 600A UNDERGROUND SERVICE. SEE NOTE 16
P1	400AT MAIN BREAKER (600AT FUTURE)	PT CT SECTION	2x 4C 350MCM	
P2	PT CT SECTION	BCHYDRO METER	AS PER MANUFACTURER SPECIFICATIONS	
P3	PT CT SECTION	MANUAL TRANSFER SWITCH	2x 4C 350MCM	
P4	250A MOBILE GENSET BREAKER	MANUAL TRANSFER SWITCH	4C 250MCM	PARALLEL CABLING OK
P7	MCC PANELBOARD	STATION HEATER 1	2C#12	
P10	MCC	VFD1 CABINET	3C 4/0	SEE NOTE 5
P11	VFD1	JBP1	2x 78øRPVC SLEEVES (1 SPARE) / 3C 4/0 TECK [2000V-RATED]	SEE NOTE 6
P12	JBP1	PUMP NO. 1	CABLE SUPPLIED BY BEDFORD (TBD)	
P20	MCC	VFD2 CABINET	3C 4/0	
P21	VFD2	JBP2	2x 78øRPVC SLEEVES (1 SPARE) / 3C 4/0 TECK [2000V-RATED]	SEE NOTE 6
P22	JBP2	PUMP NO. 2	CABLE SUPPLIED BY BEDFORD (TBD)	
P23	MCC PANELBOARD	FLOOD LIGHT	53ø RGS MAST / 2C14	

LEGAL DESCRIPTION

SURVEY BENCHMARK

REV.	DATE	DESCRIPTION	BY
5			
4	SEPT. 17, 2022	ISSUED FOR ADDENDUM #2	BF
3	AUGUST 12, 2022	ISSUED FOR TENDER	BF
2	JULY 15, 2022	ISSUED FOR 100% SUBMISSION	BF
1	MAY 4, 2022	ISSUED FOR 90% SUBMISSION	BF

"I BRENDAN FAIRS PROFESSIONAL ENGINEER, IN GOOD STANDING IN AND FOR THE PROVINCE OF BRITISH COLUMBIA, HEREBY CERTIFY THAT THE WORKS AS HEREIN SET OUT ON THE ATTACHED DRAWINGS HAVE BEEN DESIGNED TO GOOD ENGINEERING STANDARDS AND IN ACCORDANCE WITH THE LATEST EDITION OF THE CITY OF SURREY DESIGN CRITERIA MANUAL, THE MMCD, AND THE CITY OF SURREY STANDARD CONSTRUCTION DOCUMENTS (GENERAL CONDITIONS, SUPPLEMENTARY SPECIFICATIONS AND SUPPLEMENTARY STANDARD DRAWINGS), ADOPTED BY THE CITY OF SURREY."

CONSULTANT

WATANABE ENGINEERING LTD.
ELECTRICAL CONSULTING ENGINEERS
PERMIT TO PRACTICE No. 1001228
10211 ROSEDENE CRESCENT
RICHMOND, B.C. V7A 2P6
TELEPHONE: 604.241.9816
EMAIL: OFFICE@WATANABE.CA
WEL PROJECT #2904

CITY OF SURREY

CLIENT

CITY OF SURREY
13450 – 104 AVE. SURREY, B.C., CANADA V3T 1V8

COLEBROOK DRAINAGE P.S. REPLACEMENT
ELECTRICAL
SINGLE LINE DIAGRAM & MCC LAYOUT

SEAL

SCALE: AS SHOWN
DATE (YYYY.MM.DD) 2022.05.04
CONSULTANT PROJ. NO. 1072.0292.01
DESIGNED BF
DRAWN BF
REVIEWED TW
DWG. NO. E01
REV. 4
SURREY PROJECT NUMBER **6021-0004**
SURREY DRAWING NUMBER

DESTROY ALL PRINTS BEARING PREVIOUS NUMBER

Oct 17 2022 – 3:25pm N:\PROJECTS\2904 – Colebrook DPS Replacement – Surrey (Urban Systems)\Drawings\2904 – E01 to E11 REV4.dwg/E01 psmith

BILL OF MATERIALS

ITEM	QUANTITY	DEVICE	DESCRIPTION
1	–	RTU	MOTOROLA ACE 3600 (SUPPLIED BY CITY OF SURREY)
2	1	PLC	SUPPLIED AND INSTALLED UNDER THIS CONTRACT. SEE DWG E03 FOR BOM
3	1	ETHERNET SWITCH	8 PORT ETHERNET SWITCH COMPLETE WITH ETHERNET CABLES REQUIRED TO COMMUNICATE WITH PLC, RTU, AND OTHER EQUIPMENT AS REQURIED. NTRON 108TX OR APPROVED EQUAL
5	1	HMI	MAPLE SYSTEMS HMI5102L
6	1	POWER SUPPLY	120VAC INPUT 24VDC 240W OUTPUT PHOENIX TRIO, OMRON S8VS, WEIDMULLER CONNECT POWER OR OTHER APPROVED EQUAL
7	1	UPS	120VAC 1500VA TRUE ONLINE SINE WAVE UPS C/W AUX RELAY CONTACT LIEBERT GXT4–1500RT120 C/W INTELLISLOT RELAY CARD
8	1	CONTROL PANEL ENCLOSURE	NEMA12 90"H X 36"W X 20"D C/W BACK/SIDE PANELS AS SHOWN IN DRAWING. TO MATCH MCC STRUCTURE IN HEIGHT/DEPTH AND COLOR.
9	4	LOUVERS	VENTILATION LOUVERS, PRESSED IN C/W REPLACEABLE FIBERGLASS FILTERS. TOP LOUVRES COMPLETE WITH 120VAC EXHAUST FANS
10	AS REQ'D	WIREWAY	WIREWAY C/W COVER, NOT TO EXCEED SIZES SHOWN IN DRAWINGS
11	AS REQ'D	TERMINAL, FUSE, GROUND BLOCKS, STANDOFF LABEL HOLDERS	TERMINAL BLOCKS, FUSE HOLDERS COMPLETE WITH FUSES, STANDOFF LABOR HOLDERS, GROUND BLOCKS AND ALL OTHER RELATED ACCESSORIES. WEIDMULLER SAK4, AB 1492 J4 SERIES, OR OTHER APPROVED EQUIVALENT.
12	AS REQ'D	GROUND BUS	1 1/2" X 1/4" COPPER GROUND BUS. INDIVIDUAL COPPER, GROUND CABLES FROM EACH BUS TO SYSTEM GROUND.
13	AS REQ'D	BREAKERS	SEE SCHEMATIC DIAGRAMS FOR QUANTITIES AND RATINGS. ABB S201–K...(A) SERIES OR APPROVED EQUAL, CAPABLE OF BEING TURNED OFF (NOT ONLY TRIPPED), MINIMUM 10kAIC
14	AS REQ'D	DIN RAIL	AB, WEIDMULLER OR EQUIVALENT
15	1	ALARM RESET PUSH BUTTON	RED PUSHBUTTON C/W CONTACT BLOCKS ALLEN–BRADLEY 800T SERIES OR APPROVED EQUAL
16	2	HOA SWITCH	THREE POSITION SELECTOR SWITCH C/W CONTACT BLOCKS ALLEN–BRADLEY 800T SERIES OR APPROVED EQUAL
17	2	HOUR METER	24VDC INPUT, TRUMETER 732–0001 (24VDC COUNTER)
18	1	KEYPAD	SECURITY KEYPAD TO BE SUPPLIED BY CITY OF SURREY
19	1	ALARM BYPASS SWITCH	TWO POSITION SELECTOR SWITCH C/W CONTACT BLOCKS ALLEN–BRADLEY 800T SERIES OR APPROVED EQUAL
20	4	INDICATING LIGHTS	ALLEN–BRADLEY 800T SERIES OR APPROVED EQUAL, 24VDC LED BULB, PUSH–TO–TEST. REFER TO DRAWINGS FOR LAMP COLORS
21	1	SEQUENCE SWITCH	THREE POSITION SELECTOR SWITCH C/W CONTACT BLOCKS ALLEN–BRADLEY 800T SERIES OR APPROVED EQUAL
22	1	ROOM TEMPERATURE TRANSMITTER	GREYSTONE RH110B OR APPROVED EQUAL
23	2	PUMP RUN/FAULT INDICATING LIGHT	CARLO GAVAZZI DUAL LED INDICATING LIGHT, 22mm 24VDC RED/GREEN PART NO. 22S TC RG 24
24	1	DUPLEX RECEPTACLE	AB, WEIDMULLER, PHOENIX CONTACT OR OTHER EQUAL. NAMEPLATE ABOVE READING "FOR UPS INPUT ONLY!"
25	1	BUZZER	ALLEN–BRADLEY 855P–B30SE22, 24VDC PANEL MOUNT
26	AS REQ'D	LAMACOIDS	REFER TO NAMEPLATE SCHEDULE
27	1	COMPUTER RECEPTACLES	ONE PANEL MOUNT ETHERNET RECEPTACLE AND ONE PANEL MOUNT 120VAC RECEPTACLE TO BE MOUNTED ON THE OUTSIDE OF THE CONTROL PANEL
50	3	LEVEL TRANSMITTER AND ELEMENT	SIEMENS LUT420 C/W XPS–15 TRANSDUCER, REMOTE PANEL AND MOUNTING ACCESSORIES
51	1	DOOR SWITCH	DOOR SWITCH C/W 1NO 1NC CONTACTS, 120VAC RATED
52	2	MOTOR PROTECTION RELAY	SUPPLIED BY PUMP VENDOR
53	2	VFD EQUIPMENT	VFD: YASKAWA P1000 #CIMR–PU5A0242–AAA OR APPROVED EQUAL. INPUT FILTER: MIRUS LINEATOR #AUHF–200–600–60–D–E0 OUTPUT FILTER: MTE DV SENTRY #DVSP0200E OR APPROVED EQUAL REFER TO SPECIFICATIONS FOR FURTHER DETAILS.
54	1	LIGHTING PANEL	32 CCT COMBINATION PANEL, NEMA 1 BOLT ON TYPE, AS SHOWN IN DRAWINGS C/W MAIN BREAKER AND ALL BREAKERS SHOWN. FILL ALL UNUSED SPACES WITH 15A SPARE BREAKERS
55	1	LIGHTING TRANSFORMER	600V–120/240V 1ø TRANSFORMER, 25KVA, COPPER WINDINGS 4
56	1	TRANSFORMER BREAKER	OVERCURRENT PROTECTION TO MATCH ITEM 55
57	1	VOLTAGE MONITOR	LITTELFUSE DLMHBRAAA OR APPROVED EQUAL
58	1	VOLTAGE MONITOR FUSES	GOULD "ULTRASAFE" 3 PHASE FUSE HOLDER C/W 1A FUSES OR APPROVED EQUAL
59	1	MAIN BREAKER	SERVICE ENTRANCE RATED TO BC HYDRO REQUIREMENTS
60	1	BC HYDRO METER	7 JAW TO BC HYDRO SPECIFICATIONS FOR 600A, 600V 3PH IN ENCLOSURE TO BC HYDRO STANDARDS
61	1	BC HYDRO WIREWAY	TO BC HYDRO STANDARDS, PART OF MCC ASSEMBLY
62	1	SURGE PROTECTION DEVICE	LIEBERT OR OTHER APPROVED EQUIVALENT
63	1	MANUAL TRANSFER SWITCH	600A MANUAL TRANSFER SWITCH
64	4	BUILDING RECEPTACLE	DUPLEX RECEPTACLE, 15A 120V RATED, SPEC GRADE, HUBBEL OR EQUIVALENT
65	4	ROOM LIGHTS	REFER TO SPECIFICATIONS
66	3	LIGHT SWITCH	FOR ROOM AND YARD LIGHTS, SINGLE POLE, 15A 120V RATED, SPEC GRADE, HUBBEL OR EQUIVALENT
67	1	SMOKE DETECTOR	SMOKE DETECTOR WITH OUTPUT CONTACTS FOR MONITORING BY PLC. SYSTEM SENSOR C4WT–BA OR APPROVED EQUAL
68	10	YARD LIGHTS	REFER TO SPECIFICATIONS
69	1	PHOTOCELL	120VAC 5A MOUNTED AT ELEVATION ACCESSIBLE FROM GRADE
70	1	HVAC CONTROLLER	HONEYWELL #T775B2040 4
71	1	ROOM EXHAUST FAN F1	SEE ROCKY POINT ENGINEERING DRAWINGS
72	2	JBP1, JBP2	NEMA 4X RATED 610mm X 610mm X 203mm, C/W TERMINAL BLOCKS TO CITY OF SURREY STANDARDS. ENSURE JUNCTION BOX COVER CAN BE OPENED OR REMOVED (SPACE IN PIT IS MINIMAL).
73	1	ANTENNA & MAST	SINCLAIR SY406–SF4SNM(ABK) YAGI ANTENNA COMPLETE WITH MAST, MISC HARDWARE AND LMR400 CABLE
74	1	STATION HEATER	240VAC 2kW STATION HEATER C/W MOUNTING HARDWARE AS REQUIRED. C/W 24V CONTROL RELAY & TRANSFORMER OR APPROVED EQUAL. SEE ROCKY POINT ENGINEERING DRAWINGS 4
75	1	LIGHTNING ARRESTOR	POLYPHASER IS–B50LN–C2
76	3	FLOAT	FLYGT ENM–10
77	2	MOTORIZED DAMPER	SEE ROCKY POINT ENGINEERING DRAWINGS
78	1	HANDHELD PROGRAMMER	MILLTRONICS #A5E36563512 4

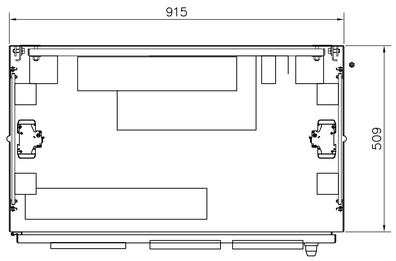

TOP VIEW

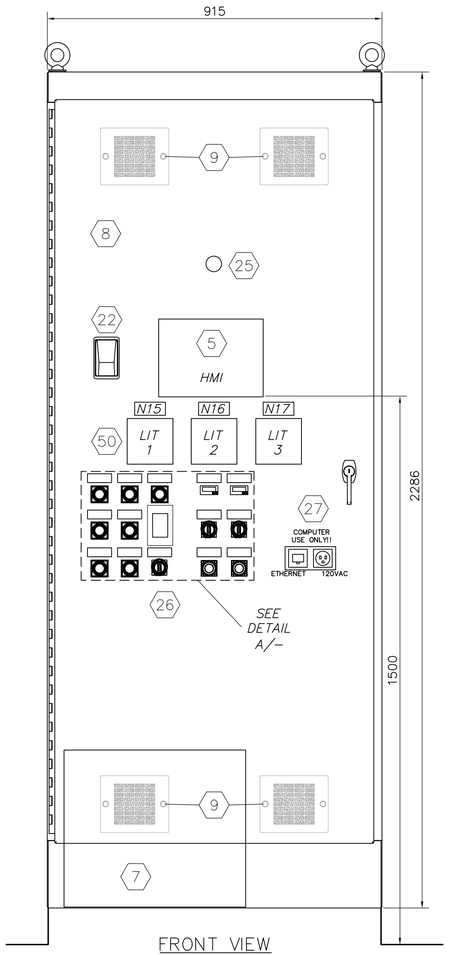

FRONT VIEW

LEFT SIDE PANEL

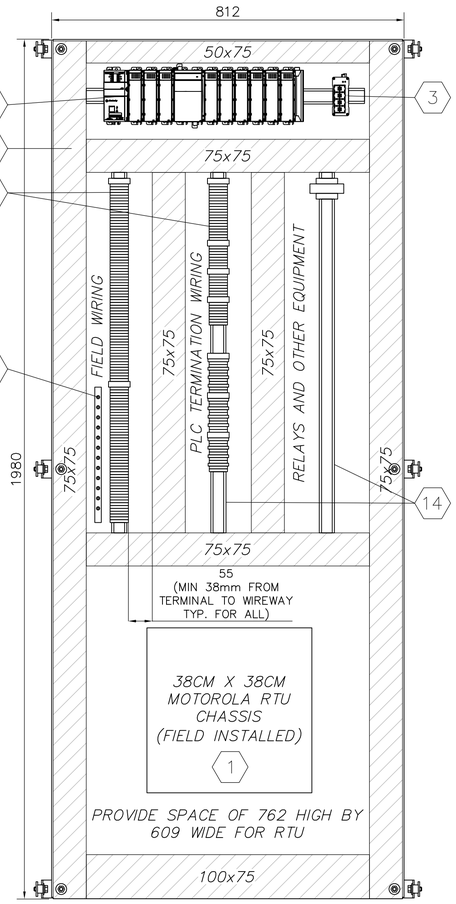

BACK PANEL

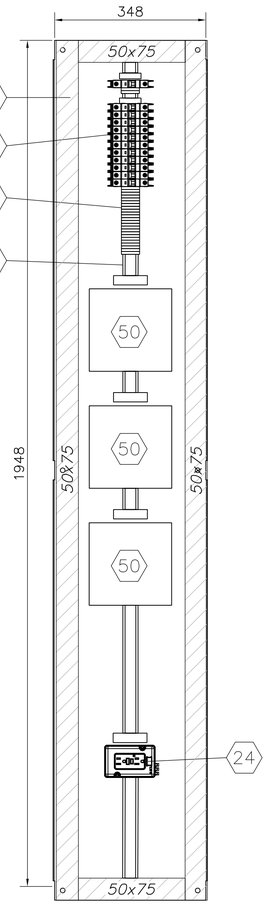

RIGHT SIDE PANEL

NAMEPLATE SCHEDULE 26	
ITEM	DESCRIPTION
N1	PUMP 1 RUN HOURS
N2	PUMP 2 RUN HOURS
N3	PUMP 1 HAND/OFF/AUTO
N4	PUMP 2 HAND/OFF/AUTO
N5	PUMP 1 RUN/FAULT
N6	PUMP 2 RUN/FAULT
N7	POWER AVAILABLE
N8	GENERAL ALARM
N9	LOCAL/REMOTE
N10	ALARM RESET/LAMP TEST
N11	P1–ALT–P2
N12	LEVEL ALARM
N13	INTRUSION ALARM
N14	
N15	WW1/WW2 LEVEL SELECT
N16	WETWELL 1 LEVEL
N17	WETWELL 2 LEVEL
N18	FOREBAY LEVEL

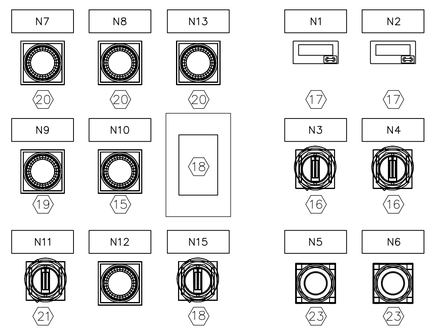

DETAIL A – N.T.S.

NOTES:

1. INSTALL WIREWAYS, TERMINAL BLOCK FUSED TERMINALS AS INDICATED ON SCHEMATIC DIAGRAMS SUBMIT SHOP DRAWINGS FOR APPROVAL PRIOR TO FABRICATION
2. FOLLOW MANUFACTURER'S GUIDELINES FOR COMPONENT SPACING INSIDE CABINETS.
3. SUBMIT SHOP DRAWINGS FOR CABINET STRUCTURE.
4. SUBMIT SHOP DRAWINGS FOR COMPONENT(S) LAYOUT.
5. INSTALL ETHERNET RECEPTACLE AND SIMPLEX RECEPTACLE ON FRONT OF CONTROL PANEL DOOR
6. ALL EQUIPMENT AND MATERIALS TO BE CSA APPROVED (OR OTHER CANADIAN EQUIVALENT).

LEGAL DESCRIPTION

SURVEY BENCHMARK

REV.	DATE	DESCRIPTION	BY
5			
4	SEPT. 17, 2022	ISSUED FOR ADDENDUM #2	BF
3	AUGUST 12, 2022	ISSUED FOR TENDER	BF
2	JULY 15, 2022	ISSUED FOR 100% SUBMISSION	BF
1	MAY 4, 2022	ISSUED FOR 90% SUBMISSION	BF

"I BRENDAN FAIRS PROFESSIONAL ENGINEER, IN GOOD STANDING IN AND FOR THE PROVINCE OF BRITISH COLUMBIA, HEREBY CERTIFY THAT THE WORKS AS HEREIN SET OUT ON THE ATTACHED DRAWINGS HAVE BEEN DESIGNED TO GOOD ENGINEERING STANDARDS AND IN ACCORDANCE WITH THE LATEST EDITION OF THE CITY OF SURREY DESIGN CRITERIA MANUAL, THE MMCD, AND THE CITY OF SURREY STANDARD CONSTRUCTION DOCUMENTS (GENERAL CONDITIONS, SUPPLEMENTARY SPECIFICATIONS AND SUPPLEMENTARY STANDARD DRAWINGS), ADOPTED BY THE CITY OF SURREY."

4 4 4 4

CONSULTANT

WATANABE ENGINEERING LTD.
ELECTRICAL CONSULTING ENGINEERS
PERMIT TO PRACTICE No. 1001228
10211 ROSEDENE CRESCENT
RICHMOND, B.C. V7A 2P6
TELEPHONE: 604.241.9816
EMAIL: OFFICE@WATANABE.CA
WEL PROJECT #2904

CITY OF SURREY

CLIENT

CITY OF SURREY
13450 – 104 AVE, SURREY, B.C., CANADA V3T 1V8

COLEBROOK DRAINAGE P.S. REPLACEMENT
ELECTRICAL
CONTROL PANEL & BILL OF MATERIALS

SEAL

SCALE: AS SHOWN
DESIGNED BF
DRAWN BF
REVIEWED TW

DATE (YYYY.MM.DD) 2022.05.04
CONSULTANT PROJ. NO. 1072.0292.01
DWG. NO. E02
REV. 4

SURREY PROJECT NUMBER **6021-0004**
SURREY DRAWING NUMBER

DESTROY ALL PRINTS BEARING PREVIOUS NUMBER 5

Oct 17 2022 – 3:26pm N:\PROJECTS\2904 – Colebrook DPS Replacement – Surrey (Urban Systems)\Drawings\2904 – E01 to E11 REV4.dwg/E02 psmith

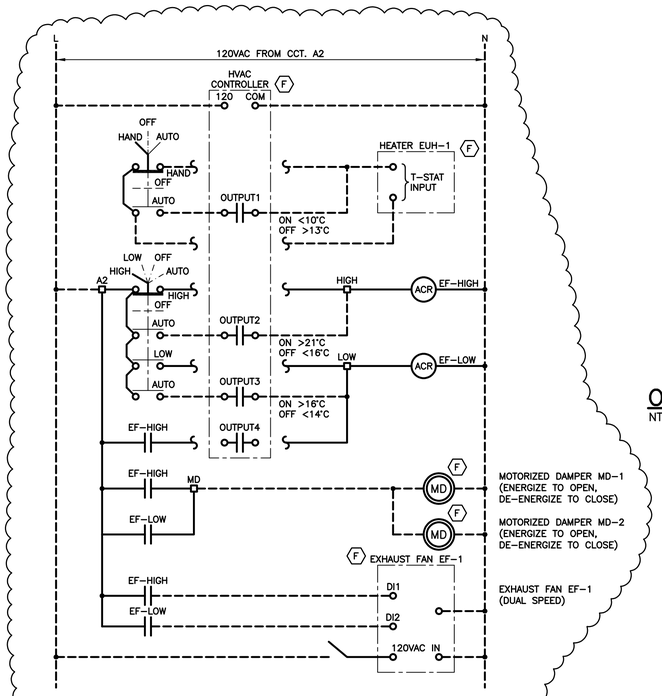

BUILDING HVAC CONTROLS

NTS SEE NOTE 4

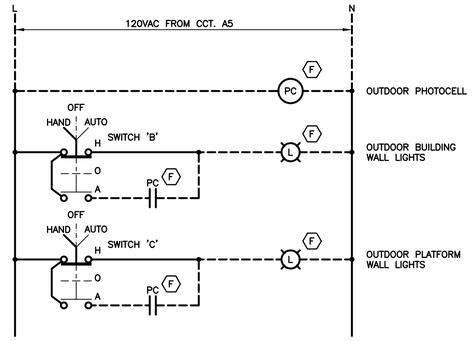

OUTDOOR WALL LIGHTS CONTROLS

NTS SEE NOTE 5

NOTES:

1. WIRE NUMBERS SHALL MATCH TERMINAL NUMBERS, UNLESS NOTED OTHERWISE.
2. ALL INDICATING LAMPS SHALL BE PUSH-TO-TEST TYPE.
3. THE PUMP MONITOR UNITS WILL BE SUPPLIED LOOSE BY THE PUMP SUPPLIER AND SHALL BE MOUNTED AT THE VFD CABINETS
4. THE HVAC CONTROL RELAYS SHALL BE MOUNTED IN AN EEMAC1 200mm x 200mm x 150mm STEEL CONTROL PANEL, WITH THE HAND-OFF-AUTO SWITCHES DOOR MOUNTED. THE ENCLOSURE SHALL BE WALL-MOUNTED INDOORS ADJACENT TO THE DOOR. LAMACOID NAMEPLATES FOR THE HAND-OFF-AUTO SWITCHES AND ENCLOSURE READING "HVAC CONTROLS" SHALL BE AFFIXED TO THE ENCLOSURE DOOR.
5. THE OUTDOOR WALL LIGHTS HAND-OFF-AUTO SWITCHES SHALL BE DOOR MOUNTED IN AN EEMAC1 150mm x 150mm x 150mm STEEL CONTROL PANEL. THE ENCLOSURE SHALL BE WALL-MOUNTED INDOORS ADJACENT TO THE DOOR. LAMACOID NAMEPLATES FOR THE HAND-OFF-AUTO SWITCHES AND ENCLOSURE READING "OUTDOOR WALL LIGHTS CONTROLS" SHALL BE AFFIXED TO THE ENCLOSURE DOOR.

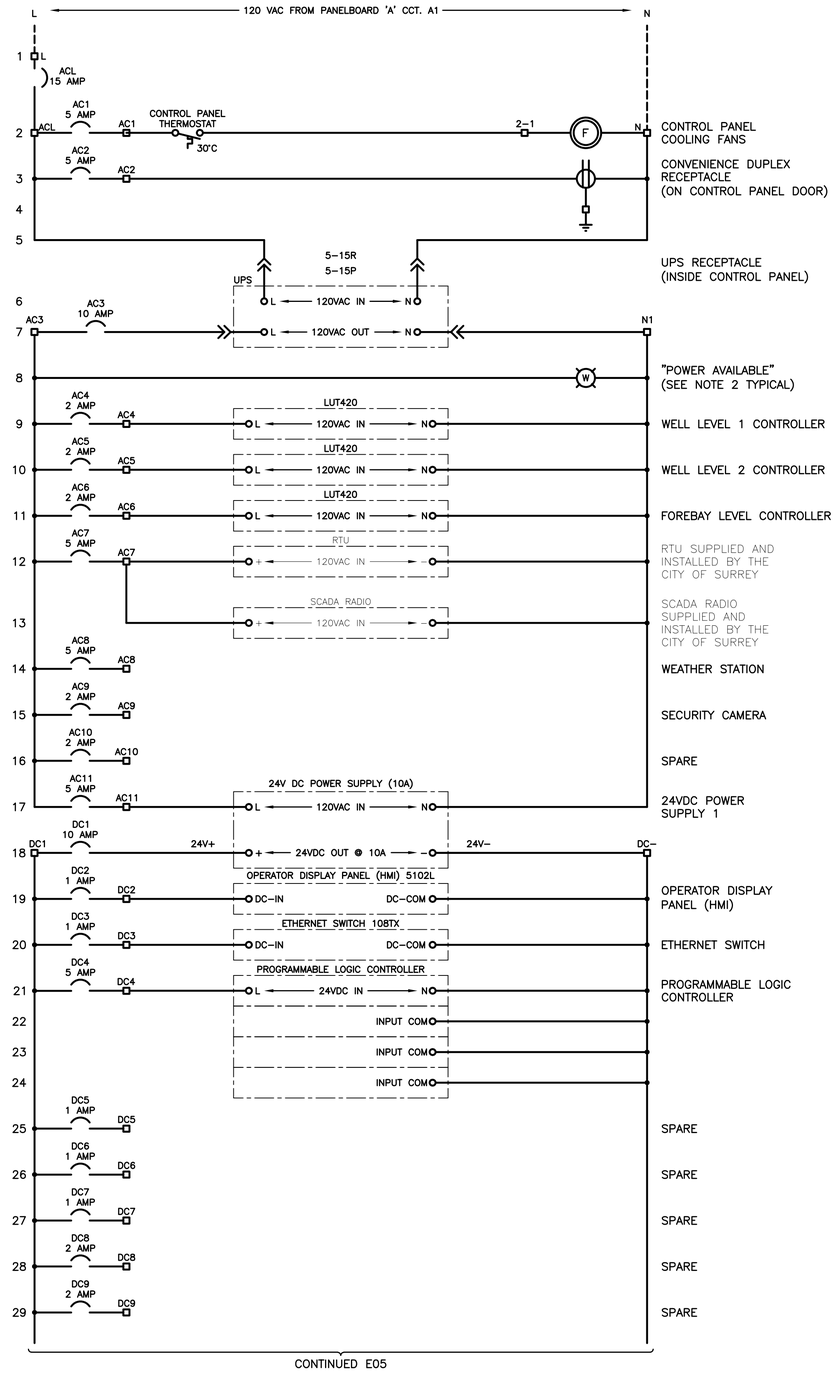

LEGEND:

○	DEVICE TERMINAL
□	CONTROL PANEL TERMINAL
▽	VFD CABINET TERMINAL
◇	JUNCTION BOX TERMINAL
ATR	AC TIMING RELAY
DCR	DC CONTROL RELAY
ACR	AC CONTROL RELAY
R	INDICATING LIGHT
NOTC	NORMALLY OPEN, TIMED CLOSING
NCTO	NORMALLY CLOSED, TIMED OPENING
——	WIRING WITHIN CONTROL PANEL
– – –	WIRING EXTERNAL TO CONTROL PANEL
F	EQUIPMENT LOCATED IN FIELD
M	EQUIPMENT LOCATED IN MCC
M	EQUIPMENT LOCATED IN VFD CABINET

PANELBOARD 'A'

LOAD VA L1	LOAD VA L2	DESCRIPTION	BKR	CIRCUIT NUMBER	BKR	DESCRIPTION	LOAD VA L1	LOAD VA L2
1500		CONTROL PANEL	15	1	2	15	EXHAUST FAN & MOTORIZED DAMPERS (4)	600
	270	INDOOR LIGHTING	15	3	4	20	SPARE	
300		OUTDOOR WALL LIGHTS	15	5	6	20	OUTDOOR WINCH RECEPTACLE	2000
150		OUTDOOR FLOOD LIGHT	15	7	8	20	OUTDOOR WINCH RECEPTACLE	2000
		SPARE	15	9	10	1	UNIT HEATER	1000
	4	DUPLEX RECEPTACLES	15	11	12	15		1000
		SPARE	15	13	14	1	A/C RECEPTACLE (FOR FUTURE) (4)	2000
		SPARE	15	15	16	20		2000
		SPARE	15	17	18	1	A/C RECEPTACLE (FOR FUTURE)	2000
		SPARE	15	19	20	20		2000
		SPARE	15	21	22	15	SPARE	
		SPARE	15	23	24	15	SPARE	
		SPARE	15	25	26	15	SPARE	
		SPARE	15	27	28	15	SPARE	
		SPARE	15	30	30	15	SPARE	

VOLTS AND PHASE: **120/240V, 1ø, 3W** AMPS: **125** (4) BREAKER SYM. I.C. **10 kA**
LOCATION: **DRAINAGE STATION MCC** MOUNTING: **MCC**
MAKE AND TYPE:

CONNECTED LOAD (VA)	3400	1420	
ESTIMATED LOAD (VA)	6000	7000	
TOTAL LOAD (VA)	9400	8420	17820 VA TOTAL

LEGAL DESCRIPTION

SURVEY BENCHMARK

REV.	DATE	DESCRIPTION	BY
5			
4	SEPT. 17, 2022	ISSUED FOR ADDENDUM #2	BF
3	AUGUST 12, 2022	ISSUED FOR TENDER	BF
2	JULY 15, 2022	ISSUED FOR 100% SUBMISSION	BF
1	MAY 4, 2022	ISSUED FOR 90% SUBMISSION	BF

"I BRENDAN FAIRS PROFESSIONAL ENGINEER, IN GOOD STANDING IN AND FOR THE PROVINCE OF BRITISH COLUMBIA, HEREBY CERTIFY THAT THE WORKS AS HEREIN SET OUT ON THE ATTACHED DRAWINGS HAVE BEEN DESIGNED TO GOOD ENGINEERING STANDARDS AND IN ACCORDANCE WITH THE LATEST EDITION OF THE CITY OF SURREY DESIGN CRITERIA MANUAL, THE MMCD, AND THE CITY OF SURREY STANDARD CONSTRUCTION DOCUMENTS (GENERAL CONDITIONS, SUPPLEMENTARY SPECIFICATIONS AND SUPPLEMENTARY STANDARD DRAWINGS), ADOPTED BY THE CITY OF SURREY."

CONSULTANT

WATANABE ENGINEERING LTD.
ELECTRICAL CONSULTING ENGINEERS
PERMIT TO PRACTICE No. 1001228
10211 ROSEDENE CRESCENT
RICHMOND, B.C. V7A 2P6
TELEPHONE: 604.241.9816
WEL PROJECT #2904 EMAIL: OFFICE@WATANABE.CA

CITY OF SURREY

CLIENT

CITY OF SURREY
13450 – 104 AVE. SURREY, B.C., CANADA V3T 1V8

COLEBROOK DRAINAGE P.S. REPLACEMENT
ELECTRICAL
120V & 24V POWER DISTRIBUTION

SEAL

SCALE: AS SHOWN
DESIGNED BF
DRAWN BF
REVIEWED TW

DATE (YYYY.MM.DD) 2022.05.04
CONSULTANT PROJ. NO. 1072.0292.01
DWG. NO. **E04** REV. 4

SURREY PROJECT NUMBER **6021-0004**
SURREY DRAWING NUMBER

DESTROY ALL PRINTS BEARING PREVIOUS NUMBER 5

Oct 17 2022 – 3:26pm N:\PROJECTS\2904 – Colebrook DPS Replacement – Surrey (Urban Systems)\Drawings\2904 – E04 REV4.dwg/Layout1 psmith

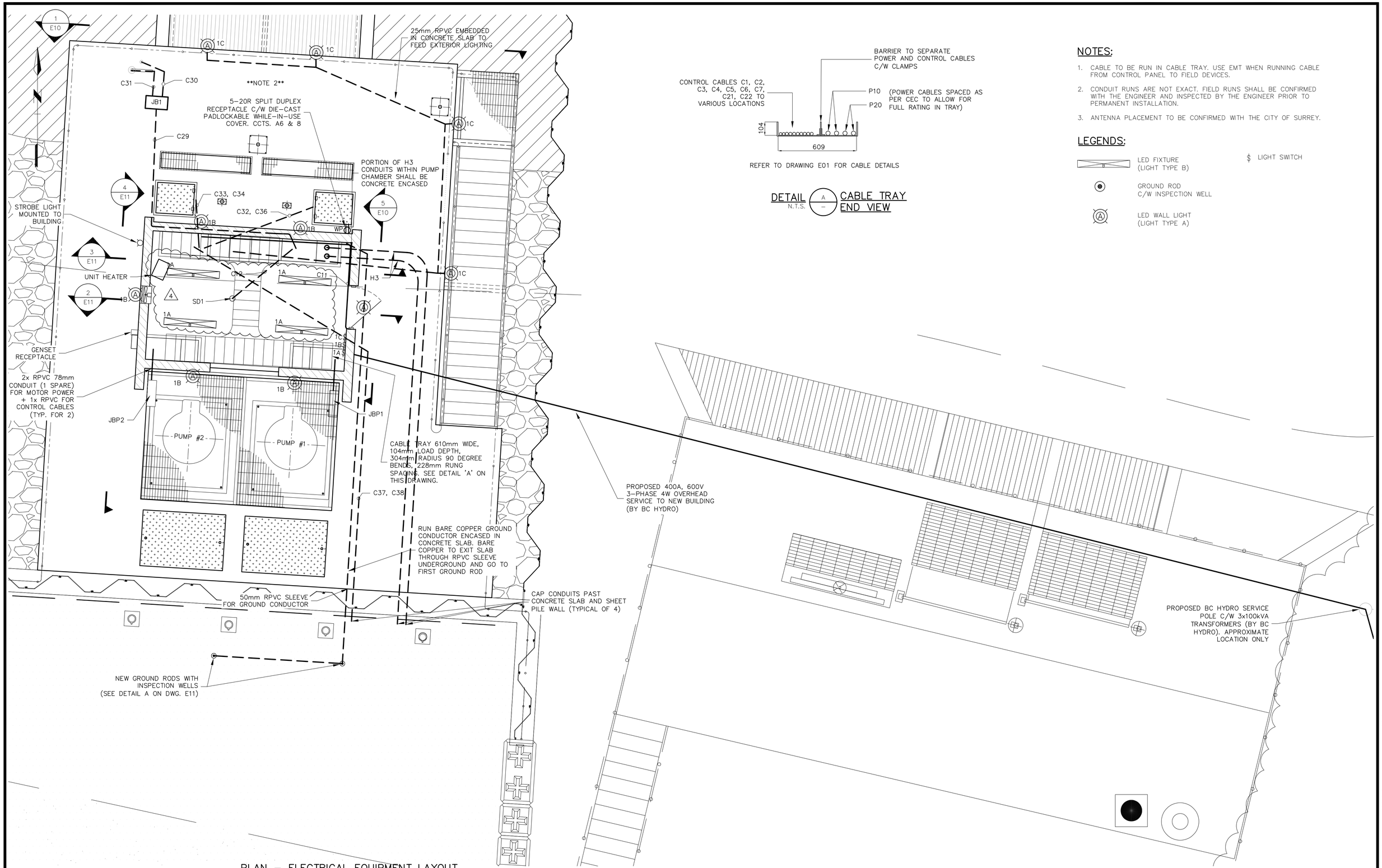

PLAN – ELECTRICAL EQUIPMENT LAYOUT

N.T.S.

LEGAL DESCRIPTION

SURVEY BENCHMARK

REV.	DATE	DESCRIPTION	BY
5			
4	SEPT. 17, 2022	ISSUED FOR ADDENDUM #2	BF
3	AUGUST 12, 2022	ISSUED FOR TENDER	BF
2	JULY 15, 2022	ISSUED FOR 100% SUBMISSION	BF
1	MAY 4, 2022	ISSUED FOR 90% SUBMISSION	BF

"I BRENDAN FAIRS PROFESSIONAL ENGINEER, IN GOOD STANDING IN AND FOR THE PROVINCE OF BRITISH COLUMBIA, HEREBY CERTIFY THAT THE WORKS AS HEREIN SET OUT ON THE ATTACHED DRAWINGS HAVE BEEN DESIGNED TO GOOD ENGINEERING STANDARDS AND IN ACCORDANCE WITH THE LATEST EDITION OF THE CITY OF SURREY DESIGN CRITERIA MANUAL, THE MMCD, AND THE CITY OF SURREY STANDARD CONSTRUCTION DOCUMENTS (GENERAL CONDITIONS, SUPPLEMENTARY SPECIFICATIONS AND SUPPLEMENTARY STANDARD DRAWINGS), ADOPTED BY THE CITY OF SURREY."

CONSULTANT

WATANABE ENGINEERING LTD.
ELECTRICAL CONSULTING ENGINEERS
PERMIT TO PRACTICE No. 1001228
10211 ROSEDENE CRESCENT
RICHMOND, B.C. V7A 2P6
TELEPHONE: 604.241.9816
EMAIL: OFFICE@WATANABE.CA
WEL PROJECT #2904

CITY OF SURREY

CLIENT

CITY OF SURREY
13450 – 104 AVE. SURREY, B.C., CANADA V3T 1V8

COLEBROOK DRAINAGE P.S. REPLACEMENT
ELECTRICAL
EQUIPMENT LAYOUT

SEAL

SCALE: AS SHOWN

DESIGNED BF

DRAWN BF

REVIEWED TW

DATE (YYYY.MM.DD) 2022.05.04

CONSULTANT PROJ. NO. 1072.0292.01

DWG. NO. **E09**

REV. 4

SURREY PROJECT NUMBER **6021-0004**

SURREY DRAWING NUMBER

DESTROY ALL PRINTS BEARING PREVIOUS NUMBER 4

Oct 17 2022 – 3:28pm N:\PROJECTS\2904 – Colebrook DPS Replacement – Surrey (Urban Systems)\Drawings\2904 – E01 to E11 REV4.dwg/E09 psmith

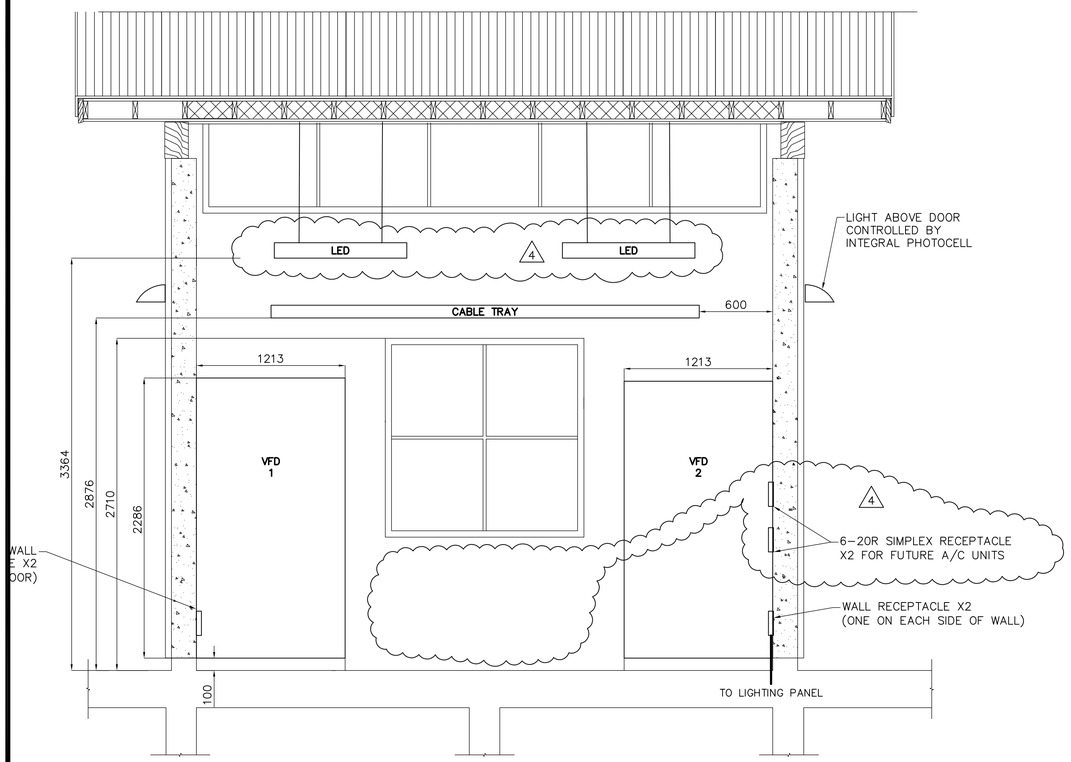

SECTION 2 E09 ELECTRICAL ROOM LOOKING SOUTH
N.T.S.

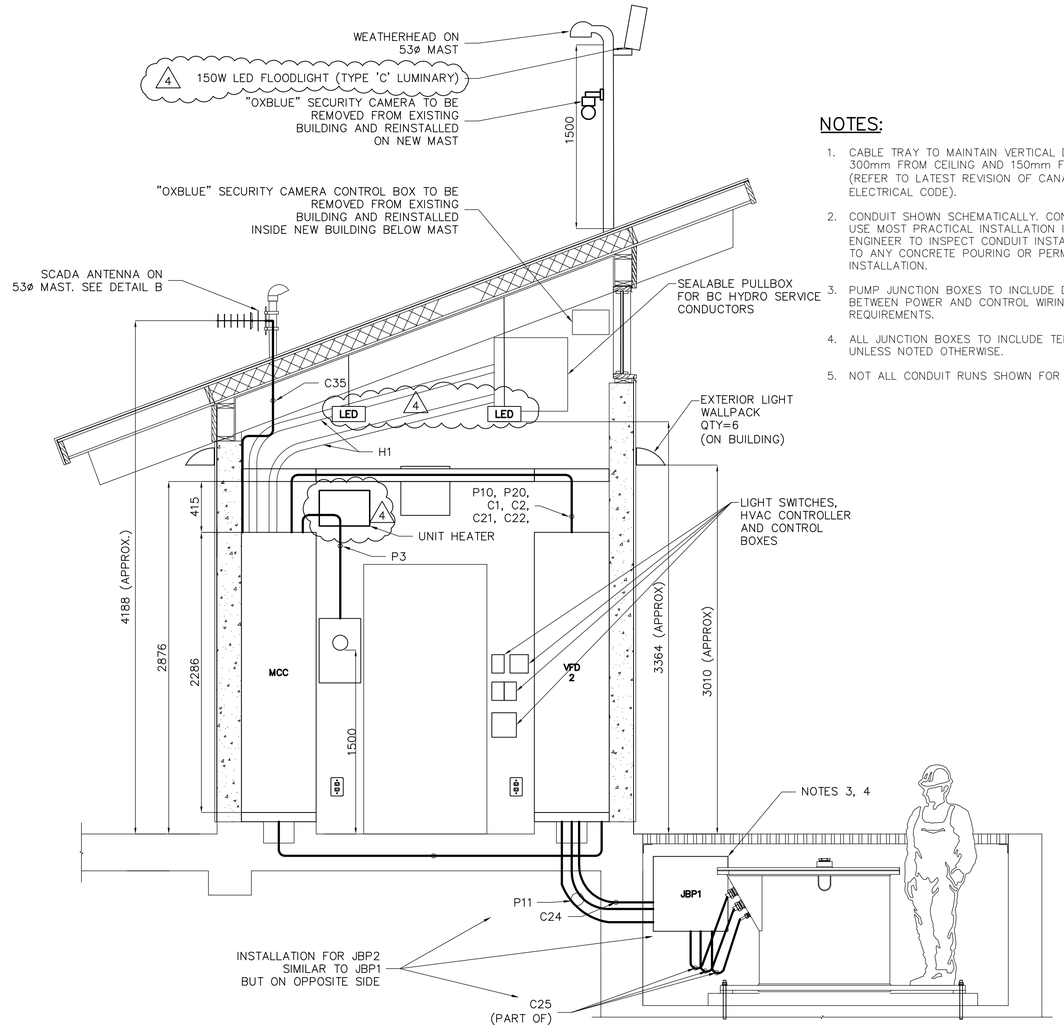

NOTES:

1. CABLE TRAY TO MAINTAIN VERTICAL DISTANCE OF 300mm FROM CEILING AND 150mm FROM LIGHTS (REFER TO LATEST REVISION OF CANADIAN ELECTRICAL CODE).
2. CONDUIT SHOWN SCHEMATICALLY. CONTRACTOR TO USE MOST PRACTICAL INSTALLATION IN FIELD. ENGINEER TO INSPECT CONDUIT INSTALLATION PRIOR TO ANY CONCRETE POURING OR PERMANENT INSTALLATION.
3. PUMP JUNCTION BOXES TO INCLUDE DIVIDER BETWEEN POWER AND CONTROL WIRING TO CEC REQUIREMENTS.
4. ALL JUNCTION BOXES TO INCLUDE TERMINAL BLOCKS UNLESS NOTED OTHERWISE.
5. NOT ALL CONDUIT RUNS SHOWN FOR CLARITY.

SECTION 4 E09 PUMP PIT LOOKING EAST
N.T.S.

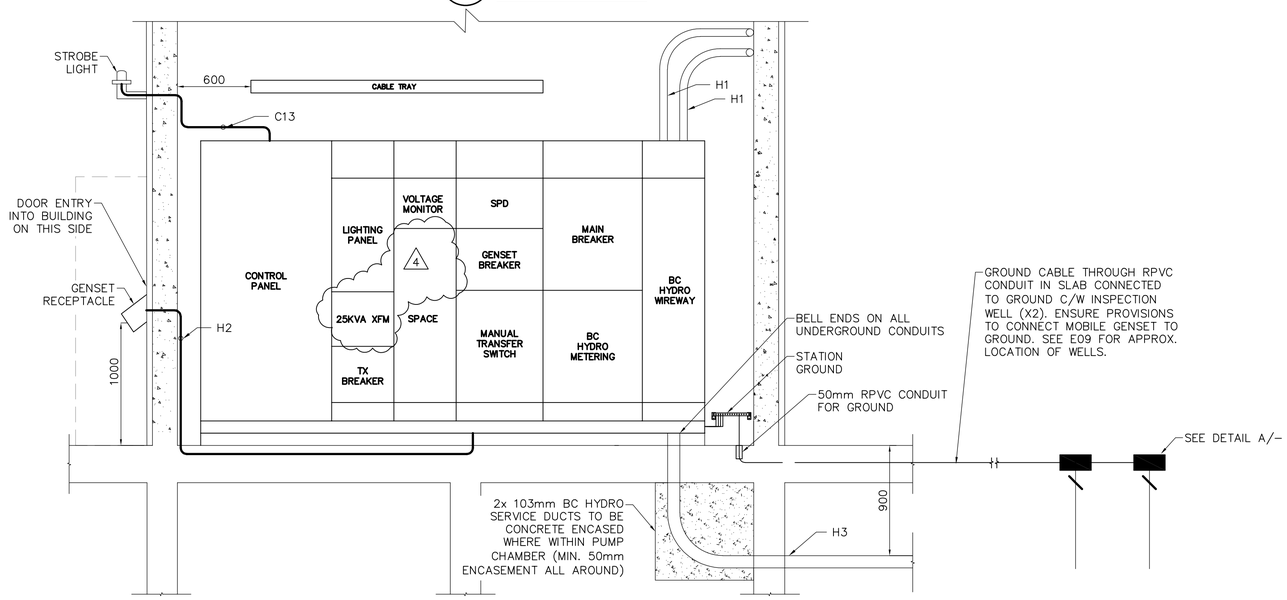

SECTION 3 E09 ELECTRICAL ROOM LOOKING NORTH
N.T.S.

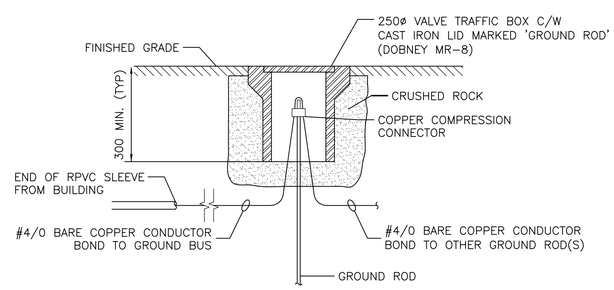

DETAIL A – GROUND ROD & INSPECTION WELL
N.T.S.

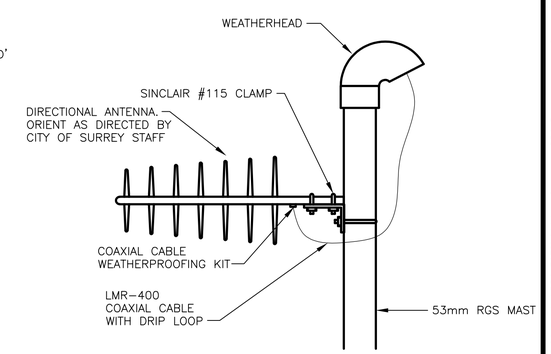

DETAIL B – SCADA ANTENNA MAST
N.T.S.

LEGAL DESCRIPTION

SURVEY BENCHMARK

REV.	DATE	DESCRIPTION	BY
5			
4	SEPT. 17, 2022	ISSUED FOR ADDENDUM #2	BF
3	AUGUST 12, 2022	ISSUED FOR TENDER	BF
2	JULY 15, 2022	ISSUED FOR 100% SUBMISSION	BF
1	MAY 4, 2022	ISSUED FOR 90% SUBMISSION	BF

"I, BRENDAN FAIRS PROFESSIONAL ENGINEER, IN GOOD STANDING IN AND FOR THE PROVINCE OF BRITISH COLUMBIA, HEREBY CERTIFY THAT THE WORKS AS HEREIN SET OUT ON THE ATTACHED DRAWINGS HAVE BEEN DESIGNED TO GOOD ENGINEERING STANDARDS AND IN ACCORDANCE WITH THE LATEST EDITION OF THE CITY OF SURREY DESIGN CRITERIA MANUAL, THE MMCD, AND THE CITY OF SURREY STANDARD CONSTRUCTION DOCUMENTS (GENERAL CONDITIONS, SUPPLEMENTARY SPECIFICATIONS AND SUPPLEMENTARY STANDARD DRAWINGS), ADOPTED BY THE CITY OF SURREY."

CONSULTANT
WATANABE ENGINEERING LTD.
ELECTRICAL CONSULTING ENGINEERS
PERMIT TO PRACTICE No. 1001228
10211 ROSEDENE CRESCENT
RICHMOND, B.C. V7A 2P6
TELEPHONE: 604.241.9816
EMAIL: OFFICE@WATANABE.CA
WEL PROJECT #2904

CITY OF SURREY

CLIENT
CITY OF SURREY
13450 – 104 AVE. SURREY, B.C., CANADA V3T 1V8

COLEBROOK DRAINAGE P.S. REPLACEMENT
ELECTRICAL
EQUIPMENT LAYOUT

SEAL

SCALE: AS SHOWN
DATE (YYYY.MM.DD) 2022.05.04
CONSULTANT PROJ. NO. 1072.0292.01
DESIGNED BF
DRAWN BF
REVIEWED TW
DWG. NO. E11
REV. 4
SURREY PROJECT NUMBER 6021-0004
SURREY DRAWING NUMBER

DESTROY ALL PRINTS BEARING PREVIOUS NUMBER

Oct 17 2022 – 3:29pm N:\PROJECTS\2904 – Colebrook DPS Replacement – Surrey (Urban Systems)\Drawings\2904 – E01 to E11 REV4.dwg/E11 psmith

PART 1 – GENERAL

1.1 References

.1 ANSI C82.4-1985, Ballasts for High-Intensity-Discharge and Low-Pressure Sodium Lamps.

1.2 Shop Drawings and Product Data

.1 Submit shop drawings and product data in accordance with Section 01 33 23

PART 2 – PRODUCTS

2.1 Type A Luminaires (outdoors, for entry doors)

.1 Equipment characteristics:
- .1 Outdoor, wall-pack, LED luminaire
- .2 Weather-resistant, aluminum housing with dark bronze polyester powdercoat finish
- .3 IP66 wet location rated
- .4 Fully-cutoff optics with “Nighttime Friendly” designation
- .5 Vertical, wall-mounting
- .6 Nominal dimensions: 206 mm high x 283 mm wide x 81 mm deep
- .7 120-277 VAC, high power factor driver
- .8 24W, 4000K, 2912 lumens, 100,000 LED lifespan lamp
- .9 CSA certification

.2 Acceptable Products:
- .1 Lithonia “WPX” series, cat. #WPX1 LED P2
- .2 Approved equal

2.2 Type B Luminaires (indoors, general purpose)

.1 Equipment characteristics:
- .1 Low-profile LED strip luminaire with snap-on, frosted diffuse lens
- .2 4000K CCT, 80 CRI LED lamps, L70 = 100,000+ hours
- .3 High gloss, baked white enamel finish
- .4 General purpose, indoor use, damp-location rated
- .5 Ceiling or wall-mounting
- .6 Nominal dimensions: 1220 mm long x 53 mm wide x 37 mm high
- .7 -20°C to 30°C ambient temperature range
- .8 Multi-voltage driver with 0-10 VDC dimming input
- .9 CSA certified

.2 Acceptable Products:
- .1 Lithonia “Z” series, #ZL1N-L48-5000LM-FST-MVOLT-40K-80CRI-WH
- .2 Approved equal

2.3 Type C Luminaires (outdoors, floodlights)

.1 Equipment characteristics:
- .1 Outdoor, LED floodlight
- .2 Weather-resistant, aluminum housing with dark bronze polyester powdercoat finish
- .3 IP66/67 enclosure, rated for -40°C minimum ambient
- .4 Thermal-shock and impact-resistant glass lens
- .5 Knuckle-mount with M20 threaded pipe
- .6 Nominal dimensions: 351 mm high x 328 mm wide x 128 mm deep
- .7 120-277 VAC, high power factor driver
- .8 150W, 5000K, 19900 lumens, 100,000 hour lifespan, LED lamps
- .9 CSA certification
- .10 Optional vandal guard to be included

.2 Acceptable Products:
- .1 Appleton “Areamaster” series, cat. #AMLGL8CG6BUM
- .2 Approved equal

2.4 Photocells (on building exteriors)

.1 Equipment characteristics:
- .1 Heavy-duty, die-cast zinc housing with stem mount
- .2 Suitable for LED luminaires with high-inrush current
- .3 Rated 8.3A @ 120VAC on tungsten loads, 15A @ 120 VAC on ballasted loads, and 6A @ 120VAC on LED loads
- .4 105-305 VAC operating voltage
- .5 Instant on at 1.5 footcandles. Off at 2.25 footcandles. Fails in On state.
- .6 Adjustable directional light hood included
- .7 Built-in 255 Joule MOV surge protector
- .8 -40C to +70C operating temperature range

.2 Acceptable Products:
- .1 Intermatic cat. #EK4436SM
- .2 Approved equal

PART 3 – EXECUTION

3.1 Installation

.1 Locate and install luminaires as indicated.

3.2 Luminaire Alignment

.1 Align luminaires mounted in continuous rows to form straight uninterrupted line.
.2 Align luminaires mounted individually parallel or perpendicular to building grid lines.

3.3 Photocell Adjustment

.1 Orient photocell facing north.
.2 Adjust sliding shutter for activation at dusk.

********** END OF SECTION **********