PROCUREMENT SERVICES

CITY OF SURREY, SURREY CITY HALL
13450 – 104th Avenue, Surrey, B.C., V3T 1V8

Tel: 604-590-7274
E-mail: purchasing@surrey.ca

ADDENDUM No. 10

INVITATION TO TENDER No.:	**1220-020-2020-001**
TITLE:	**STRAWBERRY HILL HALL REHABILITATION**
ADDENDUM ISSUE DATE:	**April 30, 2020**
REVISED CLOSING TIME:	**ON OR BEFORE THE FOLLOWING DATE AND TIME (THE "CLOSING TIME"):** **TIME: 11:00 A.M.** **DATE: MAY 5, 2020**

INFORMATION FOR TENDERERS

Tenderers are advised that this Addendum No. 10 to Contract No. 1220-020-2020-001 is hereby issued by the Owner. This addendum shall form part of the Contract Documents and is to be ready, interpreted and coordinated with all other parts. The following revisions supersede the information contained in the original *Contract Documents* and preceding addendums (if any). The cost of all Work herein shall be included in the Unit Prices tendered in the Schedule of Quantities and Prices.

QUESTIONS AND ANSWERS:

Q.1. Can you please provide clarification on the following/attached drawing questions?

1. Please confirm this stair doesn't have new stair finish.
   if we need to price stair finish, please provide spec of stair finish (treads, risers, nosing, tactile).
2. Please confirm Mezzanine floor is not scope of work.
3. Addendum 8 confirmed 4"h rubber base at kitchen and storage, please provide spec of rubber base. manufacture, color, product #.
4. Please advise if we need to use edge trim at stage edge.
   If need, please provide spec of edge trim.
5. Please confirm waterproof membrane will be used at tile floor, but not wall tile.

A.1.

i) Mezzanine stair tread, riser and interior stringer to be painted,
ii) Mezzanine floor is to be painted, as well as new plywood balustrade,
iii) Vinyl Base: Tarkett vinyl base, Type TV (1/8" gauge), 6" height, colour: 150 Wetlands
iv) Stage Edge Trim – 1"X6" paintable fir base board, Nosing detail attached. (Reference Attachment 1)
v) No waterproof membrane required at tile wainscot in WR, just ½" cement board backer

Q.2. Can you please provide clarification on the following questions?

6. The Alternate tile City View CY04 is also Discontinued- Please request new alternate.
7. What is the specification on the Tarkett Sheet vinyl. None style listed

A.2. As per A.29 and A.34 in Addendum # 9.

Q.3. Does this project require AWMAC inspections or does it only have to meet AWMAC standards?

A.3. Millwork just has to meet AWMAC Standards.

Q.4. Will the architect sign of on the fire stopping or do we need to have a engineered drawings and schedules.

A.4. Architect will sign off on fire-stopping.

Q.5. Please see the attached request for product equivalency for Strawberry Hill Hall Rehab project.

We would like to propose Ditec Entrematic (formerly Hunter Automatics) HA-8 auto swing door operator package to specified in Arch Drawings PR-A1-00 product. (See Attachment 2)

A.5. Require door weight loading for further evaluation.

Q.6. 7' diameter cedar tree stump? It's really expensive to find 5no - 7' diameter cedar stump. Can you put an allowance on this so everyone carry it and lower the tender price.

A.6. Contractor to source the five old growth cedar stumps of approximately 5' diameter. Suggest reaching out to specialty lumber retail units, for example: Kerisdale Lumber, Dicks and CanAm.

Q.7. In Addendum 09 (Q5 and Q38) the City confirmed that the sani and water connections must be made to the off-site mains. Could the City please provide a specification for the off-site connections? Specifically, we need to know whether the line is hot tapped or the pipe cut with a T put in, locations of valves if applicable, etc."

A.7. Hot Tap. Will include the valve on the service where it meets the main.

- END OF ADDENDUM -

All Addenda will become part of the ITT Documents.

Attachment 1

McGinn Engineering & Preservation Ltd.

Barry McGinn Architect

Project Strawberry Hill Hall Rehab Title Stage Nosing Detail Date 4/28/20

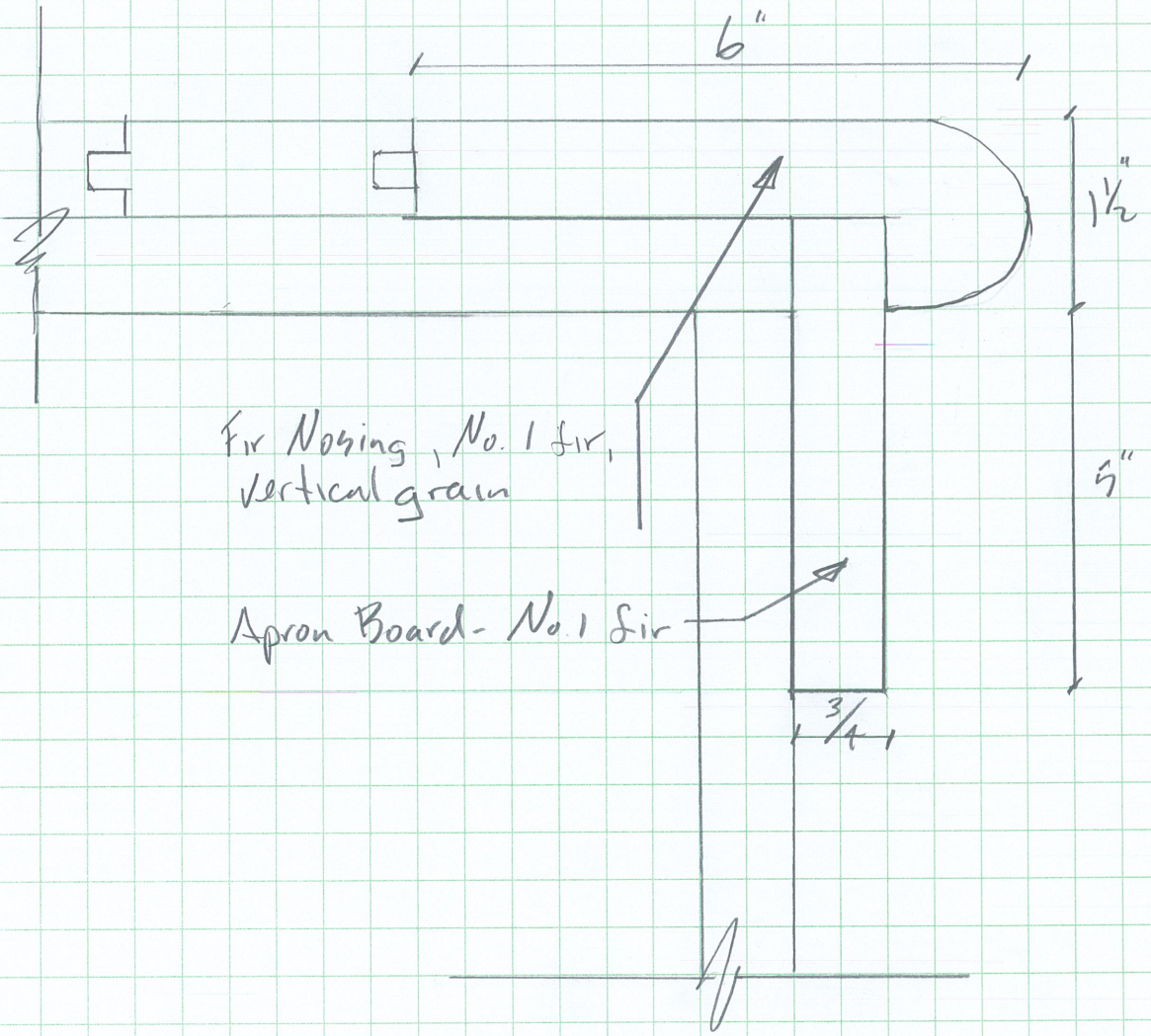

#803 - 402 West Pender Street, Vancouver, B.C. V6B 1T6
Tel: (604) 473-9866 • E-mail: mcginneng@telus.net • www.mcginn-engineering.com

ENTRE/MATIC

fire rated UL 325 low energy push pull 24 VDC ADA

Ditec HA8-SP

Standard Profile - Low Energy Operator

INSTALLED IN:

Hospitals - Retail Stores - Schools & Universities - Airports
Convention Centers - Casinos - Industrial Buildings - Offices

© Entrematic Group AB, 2017

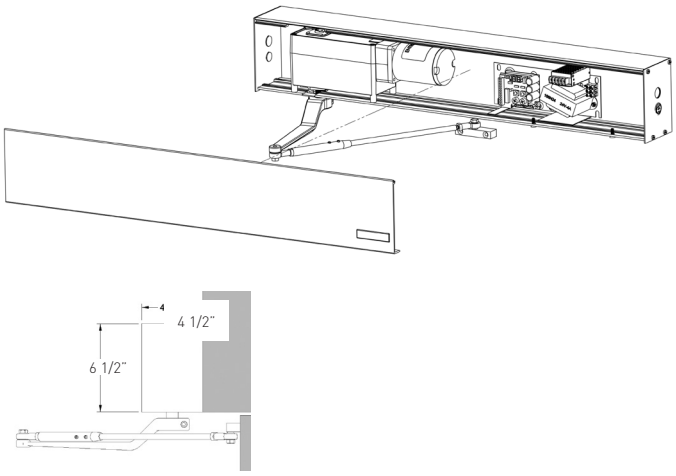

HA8-SP Profile

QUALITY HEAVY DUTY COMMERCIAL CONSTRUCTION
High precision gears made for sustained long-term use
Electro Mechanical Design – for simple dependable operation
Permanent lubrication – maintenance free
Cast Alloy Gear Box
1/8th HP motor
Digital Control Board

ADVANCED TECHNOLOGY
On-board programming
Built in strike/mag lock relay – fail safe or fail secure
Separate inputs for activation and safety devices
Plug-n-Play design for fast trouble free installation
Compatible with most safety and activation devices
Integrates with building access & security systems
Adjustable spring tension overcomes high wind and stack pressures
One-way clutch – allows for easy manual door operation

POWERFUL AND QUIET, YET FORGIVING
XP Spring available for extra closing force
Concealed Adjustable Door Stop – eliminates external door stops
Ultra Quiet operation – noise free in both automatic and manual modes

DURABLE
Built to outlast the competition
Perfect for high traffic locations

VERSATILE INSTALLATION COMBINATIONS
Concealed (Hinge Hung, Offset Pivoted or Center Pivoted)
Surface Mounted Push or Pull
Dual or Double Egress
Side or Bottom Loading
Header length can be modified in the field

STANDARD PROFILE OPERATOR	
Drive Train Gear Box	Cast Aluminum-Closed Gearbox
Single and Dual Digital Control Box	Single HA-8 w/Data, 24 VDC, 3 AMP
Operating Voltage (Standard)	115VAC
Magnetic Limit Switches	Yes
Gear Grease	High Wear Protection
Motor	1/8th HP
Opening/Closing Force	Adjustable 5 to 30 lbs.
Arm Connection	1" Solid Spline Spindle
Adjustable Stop	Yes
Operator Switch	On-Off-Hold Open
Adjustable Spring Tension	Yes
Mechanical Clutch	Standard
Header Finish (Standard)	Clear, Dark Bronze, Extruded Aluminum
Header Finish (Optional)	Paint, Special Anodized Colors, Clad
Push or Pull Application	Yes
Easy Manual Operation	Yes
XP Spring	Optional
Surface Mounting	Yes
Concealed Mounting	Center Pivot, Hinge, or Offset Pivots
Bottom Loading	Optional
Push Reveal	0" to 14"
Pull Reveal	0" to 4"
Special Push & Pull Reveals	Call Manufacturer
Push And Go	Optional
Electric Strike Output Power	24 VDC
Fire Door Compatibility	UL10C Approved
Circuit Protection	3 amp Fuse
Total Weight w/ 39" Header	45 lbs.
Meets ANSI 156.19	Yes

Technical data subject to change without notice.

Ditec HA8-SP Rev 11/17

Entrematic USA Inc.
1900 Airport Rd., Monroe, NC 28110
Tel: 704-290-0980
Fax: 704-919-5014
Toll Free: 866-901-4284
www.ditecentrematic.us

Entrematic Canada Inc.
221A Racco Pkwy, Vaughan, ON L4J 8X9
Tel: 416-674-8880
Fax: 416-674-8882
Toll Free: 877-348-6837
www.ditecentrematic.ca

Distributed By:

Member AADM American Association of Automatic Door Manufacturers

Entrematic, Amarr, Kelley, Serco, Normstahl, Dynaco, Ditec and EM, as words and logotypes, are examples of trademarks owned by Entrematic Group AB or companies within the Entrematic Group

SECTION 08460
DITEC HA8-SP STANDARD PROFILE/LOW ENERGY - AUTOMATIC SWING DOOR OPERATOR

1. GENERAL

1.01 Summary
A. Work included:
   1. Electro-mechanical swing door operating equipment
   2. Controls and safety devices
   3. Accessories

B. Related Work: [Insert applicable section including]
   1. Section 07900 – Caulking
   2. Section 08400 – Entrances and Storefronts
   3. Section 08710 – Finished Hardware
   4. Section 08800 – Glazing
   5. Section 12670 – Entrance Mats
   6. Section 16120 – Electrical Supply and Termination

1.02 Submittals
A. Product Data: Provide manufacturer's product and complete installation data for all materials in this specification.

B. Shop Drawings: Show profiles, joining methods, location of components, anchorage details, adjacent construction interfacing and dimensions as well as all necessary wiring and electrical requirements.

C. Samples: Sized to adequately represent material

D. Contract Closeout: Submit the Manufacturer's warranty and performance certification (if applicable)

E. Installation Guide: Provide written installation and operating manuals and/or installation recommendations.

1.03 Quality Assurance
A. Installation and maintenance shall be performed by an authorized dealer and in strict compliance with the manufacturer's recommendations.

B. Conforms to UL Std. 325 & ANSI/BHMA STD. A156.19; UL STD. 10(b); UL STD. 10(c); NFPA STD. 252; Certified to Can/CSA STD. C22.2 NO.247 & CAN/ULC STD. S104

1.04 Product Handling
A. All materials shall arrive in the manufacturers original sealed, labelled containers.

B. Store materials in a dry, protected, well-vented area. Report damaged material immediately to the delivering carrier and note such damage on the carrier's freight bill of lading.

C. Remove and dispose of all protective materials after installation.

1.05 Job Condition

A. Verify that other trades are complete before installing the automatic swinging door system.

B. Mounting surfaces shall be plumb, straight and secure; substrates shall be proper dimension and material.

C. Refer to the construction documents, shop drawings and manufacturer's installation instructions.

D. Coordinate installation with the glass, glazing and electrical work.

E. Observe all appropriate OSHA safety guidelines for this work.

1.06 Warranty/Guarantee

A. Manufacturer's Standard Limited Warranty: Warranted materials shall be free of defect in material and workmanship for three years after installation

2. PRODUCTS

2.01 Manufacturer: ENTREMATIC Group AB

Entrematic Canada Inc.
221A Racco Parkway
Vaughan, Ontario, L4J 8X9
Phone: 1-877-348-6837

Entrematic USA Inc.
1900 Airport Rd
Monroe, NC, 28110
Phone: 1-866-901-4284

2.02 Automatic Swing Door Operator

A. Automatic Door Operator: Shall be DITEC HA8-SP. The system shall be an electro-mechanical system installed in a header to resist dust, dirt and corrosion. Bearings shall be fully lubricated and sealed to minimize wear and friction. Entire operator shall be removable from the header as a unit. All equipment shall operate between temperature extremes of -4F (-20C) and +120F (50C).

B. Power Opening: Operator shall open door with a 1/8 HP motor through reduction gears splined spindle, door arm and linkage assembly. Drive train shall have positive constant engagement. Operator shall stop the door in the open position by electrically reducing the motor voltage and stalling against stop.

C. Spring Close: Operator shall close door by spring energy. Employing the motor as a dynamic brake shall control closing speed. Closing spring shall be pre-loaded for positive closing action. "Low energy" operator door closing time shall not be less than 4.5 seconds.

D. Manual Operation: Operator shall function as a manual door closer in the direction of swing with or without electrical power. To facilitate easy manual operation of door and to prolong gear and motor life the operator must have a one-way clutch in the gear train.

E. Entrapment Protection: Door forces and speeds generated during power opening and manual opening in both directions of swing and spring closing in both directions of swing shall conform to the requirements of ANSI-BHMA Std. A156.19, UL 325, and Code of Federal Regulations, ADA Standards of Accessible Design paragraph 4.13.12.

F. Electrical Control: Electronic controllers with quick connect plugs shall incorporate the following features:

1. Mode of Operation: To be “Low Energy” as defined by ANSI-BHMA Std. A156.19.
2. Respond to push plates, transmitters and receivers.
3. Immediate reverse-on-obstruction during opening capability.
4. Open, back check and closing speed adjustment.
5. Adjustable time delays.
6. ON/OFF/Hold-Open switch, and ON/OFF switch (analog board available in Canada only)
7. Door open status is available and connected during installation.

G. Header: Shall be 4-1/2” wide by 6-1/2” high, 6063-T5 aluminum extrusions with structurally integrated end caps. Structural sections shall have a minimum wall thickness of .125”. Provide full length removable cover for access to operator and electronic control box.

H. Aluminum Extrusion Finish: Standard anodized finish shall be Clear, Bronze or Light Bronze. Special anodized, painted and clad finishes are available upon request. Specify type and color.

I. Linkage Assembly: Shall provide positive control of door through entire swing; Surface applied permit use on butt-hung or offset pivots. Concealed permit use on center pivot, butt-hung, and offset pivots.

J. Controls: Push Plates, Transmitters, Safety Sensors, Card Readers, etc.

3. EXECUTION

3.01 Inspection

A. The door installer shall verify that the installation area is dry, clean and free of foreign matter. Check as-built conditions and verify the manufacturer’s details for accuracy to fit the wall assembly prior to fabrication.
Report in writing to the Contractor any conditions detrimental to the proper functioning of the swinging door operator. Correct prior to any installation in accordance to the manufacturer’s recommendations.

3.02 Installation of Automatic Swinging Door System

A. Installation shall be by an installer approved and trained by the manufacturer in strict accordance with the manufacturer’s instructions and fire marshal’s listing requirements.

B. Comply with the automatic swinging door system manufacturer’s recommendations and/or installation guide when installing the automatic swinging entrance system. Set all units plumb, level and true.

C. Provide all fasteners required for installation of the automatic swinging door system.

D. Adjustment and Cleaning: After repeated operation of the completed installation, re-adjust door operators and controls for optimum operating condition and safety. Clean all metal surfaces promptly after installation.

E. Explain and review the Daily Safety Check Procedure.

END SECTION 08460

All the rights concerning this material are the exclusive property of Entrematic Group AB.
Although the contents of this publication have been drawn up with the greatest care, Entrematic Group AB cannot be held responsible in any way for any damage caused by mistakes or omissions. We reserve the fight to make changes without prior notice.

APPLICATION:
LOW ENERGY OPERATOR
PAIR DOORS PUSH

NOTE: DRAWING IS DIMENSIONED IN BOTH INCHES & METRIC (mm)

AUTOMATIC SWING DOOR OPERATOR SHALL BE "HA8" CETL USA APPROVED, CONFORMING TO UL STD. 325 & ANSI-BHMA STD. A156.19 FIRE RATED TO UL STD. 10(B); UL STD. 10(C), CERTIFIED TO CAN. CSA STD. C22.2#247 AS MANUFACTURED BY ENTREMATIC GROUP AB. 32" (813) CLEAR OPENING REQUIRED TO MEET ADA REQUIREMENT.

STANDARD FINISH: ANODIZED, CLEAR; DARK BRONZE;
SPECIAL FINISHES ARE AVAILABLE

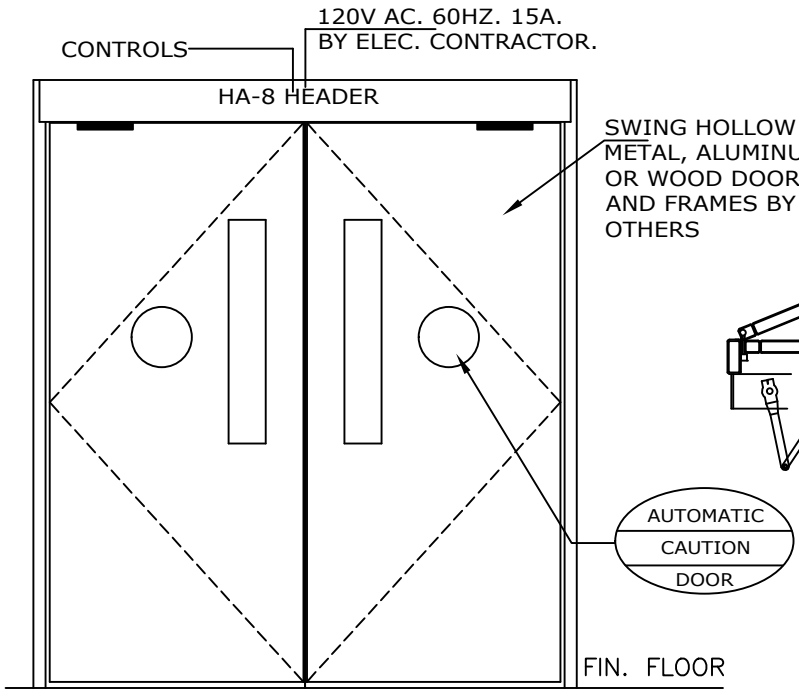

ELEVATION

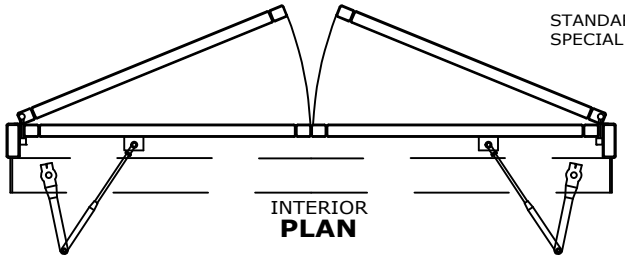

INTERIOR
PLAN

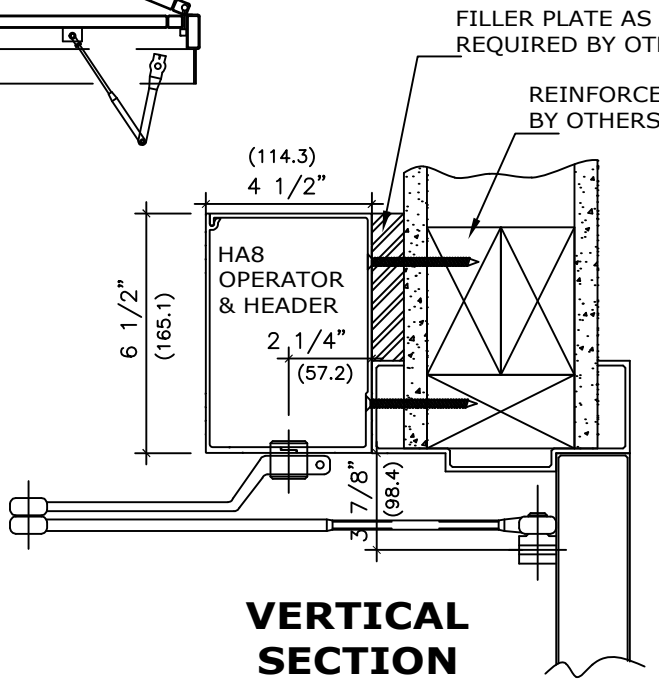

VERTICAL SECTION

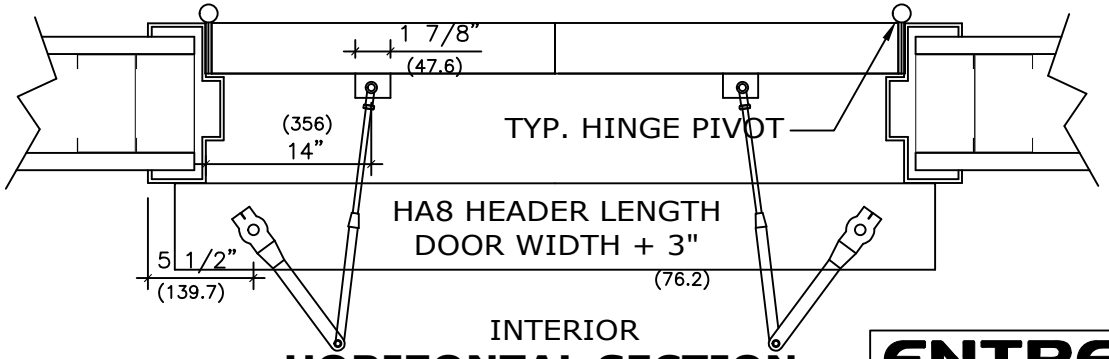

INTERIOR
HORIZONTAL SECTION

NOTE:
ENTREMATIC GROUP AB, RESERVES THE RIGHT TO CHANGE & IMPROVE IT'S PRODUCTS & SPECIFICATIONS WITHOUT NOTICE.

ENTREMATIC
TEL. 877-348-6837 (CANADA)
www.ditecentrematic.ca
TEL. 866-901-4284 (USA)
www.ditecentrematic.us

JOB NAME:

LOCATION:

DOOR NUMBER:

SHEET NO. 3

SECTION HA