REQUEST FOR QUOTATIONS

Title: **Supply and Delivery of Three (3) (More or Less) Dynamic Messaging Signs**

Reference No.: 1220-040-2018-039

FOR THE SUPPLY OF GOODS

(General Services)

TABLE OF CONTENTS

REQUEST FOR QUOTATIONS

1. INTRODUCTION

The City of Surrey (the "City") invites contractors to provide a quotation on the form attached as Schedule B to Attachment 1 (the "Quotation") for the supply of the goods described in Schedule A to Attachment 1 (the "Goods"). The description of the Goods sets out the minimum requirements of the City. A person that submits a Quotation (the "Contractor") should prepare a Quotation that meets the minimum requirements, and may as it may choose, in addition, also include goods, or terms that exceed the minimum requirements.

2. ADDRESS FOR DELIVERY

A Quotation should be labelled with the Contractor's name, RFQ title and number. A Quotation should be submitted in the form attached to this RFQ as Schedule B – Form of Quotation.

The Contractor may submit a Quotation either by email or in a hard copy, as follows:

(a) Email

If the Contractor chooses to submit by email, the Contractor should submit the Quotation electronically in a single pdf file which must be delivered to the City by email at: purchasing@surrey.ca

PDF emailed Quotations are preferred and the City will confirm receipt of emails. Note that the maximum file size the City can receive is 10Mb. If sending large email attachments, Contractors should phone to confirm receipt. A Contractor bears all risk that the City's equipment functions properly so that the City receives the Quotation.

(b) Hard Copy

If the Contractor chooses NOT to submit by email, the Contractor should submit one (1) original unbound Quotation and one (1) copy (two (2) in total) which should be delivered to the City at the office of:

Name: Richard D. Oppelt
Purchasing Manager
at the following location:

Address: Surrey City Hall
Finance & Technology Department – Purchasing Section
Reception Counter 5th Floor West
13450 – 104th Avenue,
Surrey, B.C., V3T1V8, Canada

3. DATE

The City would prefer to receive Quotations on or before **June 7, 2018**. The City's office hours are 8:30 a.m. to 4:00 p.m., Monday to Friday, except statutory holidays.

4. INQUIRIES

All inquiries related to this Request for Quotations ("RFQ") should be directed in writing to:

Name: Richard D. Oppelt, Purchasing Manager
Email: purchasing@surrey.ca

Reference: 1220-040-2018-039

5. ADDENDA

If the City determines that an amendment is required to this RFQ, the City Representative will issue a written addendum by posting it on the BC Bid Website at www.bcbid.gov.bc.ca (the "BC Bid Website") and the City Website at www.surrey.ca (the "City Website") that will form part of this RFQ. It is the responsibility of Contractors to check the BC Bid Website and the City Website for addenda. The only way this RFQ may be added to, or amended in any way, is by a formal written addendum. No other communication, whether written or oral, from any person will affect or modify the terms of this RFQ or may be relied upon by any Contractor. By delivery of a Quotation, the Contractor is deemed to have received, accepted and understood the entire RFQ, including any and all addenda.

6. NO CONTRACT

This RFQ is simply an invitation for quotations (including prices and terms) for the convenience of all parties. It is not a tender and no obligations of any kind will arise from this RFQ or the submission of Quotations. The City may negotiate changes to any terms of a Quotation, including terms in Attachment 1 and Schedules A and B and including prices, and may negotiate with one or more Contractors or may at any time invite or permit the submission of quotations (including prices and terms) from other parties who have not submitted Quotations.

7. ACCEPTANCE

A Quotation will be an offer to the City which the City may accept at any time by signing the copy of the Quotation and delivering it to the Contractor. A Quotation is not accepted by the City unless and until both the authorized signatory of the Contractor and the authorized signatory of the City have signed. Delivery of the signed Agreement by the City may be by fax, pdf e-mail or hard copy. In that event, the contract will be comprised of the documents included in the definition of Agreement in Attachment No. 1 – Quotation Agreement – Goods.

8. CONTRACTOR'S EXPENSES

Contractors are solely responsible for their own expenses in preparing and submitting Quotations, and for any meetings, negotiations or discussions with the City or its representatives and consultants, relating to or arising from the RFQ. The City will not be

liable to any Contractor for any claims, whether for costs, expenses, losses or damages, or loss of anticipated profits, incurred by the Contractor in preparing and submitting a Quotation, or participating in negotiations for a contract, or other activity related to or arising out of this RFQ.

9. CONTRACTOR'S QUALIFICATIONS

By submitting a Quotation, a Contractor represents that it has the expertise, qualifications, resources, and relevant experience to supply the Goods.

10. CONFLICT OF INTEREST

A Contractor should disclose in its Quotation any actual or potential conflicts of interest and existing business relationships it may have with the City, its elected or appointed officials or employees. The City may rely on such disclosure.

11. SOLICITATION OF COUNCIL MEMBERS AND CITY STAFF

Contractors and their agents will not contact any member of the City Council and City staff with respect to this RFQ, other than the contact person named in Section 4, at any time prior to the award of a contract or the cancellation of this RFQ.

12. CONFIDENTIALITY

All Quotations become the property of the City and will not be returned to the Contractor. All Quotations will be held in confidence by the City unless otherwise required by law. Contractors should be aware the City is a "public body" defined by and subject to the *Freedom of Information and Protection of Privacy Act* of British Columbia.

13. SIGNATURE

The legal name of the person or firm submitting the Quotation should be inserted in the Quotation. The Quotation should be signed by a person authorized to sign on behalf of the Contractor and include the following:

(a) If the Contractor is a corporation then the full name of the corporation should be included, together with the names of authorized signatories. The Quotation should be executed by all of the authorized signatories or by one or more of them provided that a copy of the corporate resolution authorizing those persons to execute the Quotation on behalf of the corporation is submitted;

(b) If the Contractor is a partnership or joint venture then the name of the partnership or joint venture and the name of each partner or joint venturer should be included, and each partner or joint venturer should sign personally (or, if one or more person(s) have signing authority for the partnership or joint venture, the partnership or joint venture should provide evidence to the satisfaction of the City that the person(s) signing have signing authority for the partnership or joint venture). If a partner or joint venturer is a corporation then such corporation should sign as indicated in subsection (a) above; or

(c) If the Contractor is an individual, including a sole proprietorship, the name of the individual should be included.

14. BRAND NAMES

Wherever the specifications state a brand name, make, name of manufacturer, trade name, or Contractor catalogue number, it is for the purpose of establishing a grade or standard. It is not intended to rule out competition from equal brands or makes. If vehicles or equipment other than that specified is offered, it is the Contractor's responsibility to provide information in its Quotation that enables the City to confirm equivalency and acceptance.

Except where stated otherwise, the specifications described in **Schedule A** describe what is considered necessary to meet the performance requirements of the City and Contractors should consider this in its Quotation. If the Contractor cannot meet specifications, the Contractor may identify and offer an alternative which it believes to be an equal or better alternative.

Contractors shall clearly indicate any variances from the City's specifications or conditions and attach descriptive literature.

The City is not obligated to accept any alternatives. The City will determine what constitutes acceptable deviations and overall best value.

Attachment No. 1 – DRAFT QUOTATION AGREEMENT – GOODS

Reference RFQ Title: Supply and Delivery of Three (3) (More or Less) Dynamic Messaging Signs

RFQ No.: 1220-040-2018-039

BETWEEN:

CITY OF SURREY
13450 - 104 Avenue
Surrey BC V3T 1V8

(the "City")

AND:

(the "Contractor")

WHEREAS the City wishes to engage the Contractor to provide the Goods and the Contractor agrees to provide the Goods.

THEREFORE in consideration of the payment of one ($1.00) dollar and other good and valuable consideration paid by each of the parties to the other (the receipt and sufficiency of which is hereby acknowledged) the City and the Contractor agree as follows:

DEFINITIONS AND INTERPRETATION

1. In these General Terms and Conditions:
   (a) "Agreement" means this agreement and all schedules attached hereto;
   (b) “City” means the City of Surrey;
   (c) “Contractor” means a contractor whose Quotation has been accepted by the City and who is supplying the Goods under this Agreement;
   (d) "Goods" means the equipment or materials that are the subject of this Agreement;
   (e) “Purchase Price” means the price quoted by the Contractor and accepted by the City, unless otherwise agreed by the parties in writing, and includes all taxes, duties, freight charges and other charges except GST; and
   (f) “RFQ” means the Request for Quotations.

2. This Agreement may be modified only by express and specific written agreement. In the event of a conflict between the provisions of any documents listed below, then the documents shall govern and take precedence in the following order:
   (a) this Agreement;
   (b) the RFQ;
   (c) the Quotation; and
   (d) other terms, if any, that are agreed to by the parties in writing.

3. The following attached Schedules are a part of this Agreement:

Schedule A – Specifications of Goods;
Schedule A-1 – Drawings; and
Schedule B – Quotation.

GOODS

4. The Contractor will supply the Goods in accordance with this Agreement. The Goods supplied will meet the specifications set out in Schedule A of this Agreement.

5. The Contractor will deliver the Goods free and clear of all liens and encumbrances in the manner and to the destination stipulated. In the event of the Contractor's failure to meet this condition, the Contractor will, on written notice from the City, forthwith return all monies paid by the City on account of the Goods and in addition the City may by written notice terminate this Agreement without liability, and in such event, in addition to the above, the Contractor will be liable for any and all expenses or losses incurred by the City resulting from such failure.

PURCHASE PRICE

6. The City will pay the Purchase Price to the Contractor in accordance with this Agreement. The Purchase Price shall also include without limitation all costs of boxing, packing, crating, and loading and unloading the Goods at the prescribed destination.

7. Time is of the essence.

PAYMENT

8. Invoices should include the Contractor’s name, address and telephone number, the City’s purchase order number, the Contractor’s invoice number, the Contractor’s GST registration number or an indication that it is not applicable if the Contractor is a small trader, the quantity, tax (if any) and the complete Purchase Price calculations, including extensions and discounts.

9. The City will pay the invoice, in the amount as the City determines is correct less any deductions for setoffs or holdbacks permitted by this Agreement including, without limitation, those described in Sections 11, 12 and 13, within 30 days of the receipt of the invoice, unless the parties have agreed in writing to other payment terms. The payment by the City of any invoice will not bind the City with respect to any subsequent payment or final payment and will not mean that the City has accepted that the Goods are in accordance with the requirements of this Agreement, or that the Contractor is in any manner released from its obligation to comply with this Agreement.

10. Unless otherwise provided, all dollar amounts referred to in this Agreement are in lawful money of Canada.

Please send your hard copy invoices by mail to:

Name: _____
Address: _____
_____

DEFICIENCIES

11. The City shall have a reasonable time to inspect and to accept the Goods. The City may reject any Goods not in accordance with this Agreement, whether due to damage resulting from improper packing, loading, unloading or otherwise. The City shall notify the Contractor of rejection of the Goods whereupon the Goods will be held subject to the disposition by the Contractor. Any costs or expenses incurred by the City as a result of the rejection of the Goods are, immediately upon written demand by the City, payable by the Contractor, and may be set off against any payments owing by the City to the Contractor.

12. The City may hold back from payments otherwise due to the Contractor up to 150% of a reasonable estimate, as determined by the City, on account of deficient or defective materials. This holdback may be held, without interest, until replacement Goods are received or such deficiency or defect is remedied.

DEFAULT AND TERMINATION

13. In the event the Contractor does not ship the Goods by the shipping date specified in this Agreement, or does not deliver the Goods by the delivery date specified in this Agreement, or otherwise fails to comply with the requirements of this Agreement, then:

    (a) the City reserves the right to terminate this Agreement, in whole or in part, and in the event of such termination no payment will be owing by the City on account of this Agreement and the Contractor will be liable for any and all expenses or loss resulting from such failure or delay and will return all monies paid by the City; or

    (b) if the City does not terminate this Agreement for late shipping or delivery, the City may deduct and setoff from any payments owing to the Contractor all additional costs the City reasonably incurs on account of the late shipping or delivery.

14. The City may by written notice at any time cancel this Agreement with respect to Goods which, as of the date of cancellation, have not been shipped.

15. If the Contractor becomes insolvent or makes an assignment for the benefit of creditors or a receiver or trustee is appointed for the property of the Contractor, then the City may, at its election, and without prejudice to its rights at law or in equity, terminate this Agreement.

16. The City will not accept nor be responsible for any restocking charges for any Goods shipped to the City and then, for whatever reason, returned to the Contractor pursuant to this Agreement. The Contractor is to bear all costs including shipping and handling of returned Goods.

WARRANTIES AND INDEMNITIES

17. The Contractor warrants that the Goods shall be free from defects in design, materials, workmanship and title, shall conform in all respects to the terms of this Agreement, shall be fit and suitable and perform satisfactorily for the purposes and under the conditions made known to the Contractor by the City or which were reasonably inferable. The Goods shall be at least equal to the higher of national standards or codes (such as, by way of illustration, CSA or ASTM), or standards and codes customarily applicable at the place where the City will use the Goods. The Goods shall be of the best quality, if no quality is specified. This general warranty is independent of and without prejudice to any specific warranty or service guarantee offered by the Contractor or third party manufacturer or supplier of the Goods in connection with the purpose for which the Goods were purchased. The Contractor shall assign to the City any warranty or service guarantee offered by a third party manufacturer or supplier of the Goods. Notwithstanding this assignment, if at any time up to one year from the date of delivery or installation (if applicable) the City determines the Goods or any part do not conform to these warranties, the City shall notify the Contractor within a reasonable time after such discovery, and the Contractor shall then promptly correct such nonconformity at the Contractor's expense. Goods used to correct a nonconformity shall be similarly warranted for one year from the date of installation. The Contractor's liability shall extend to all liabilities, losses, damages, claims and expenses incurred by the City caused by any breach of any of the above warranties.

18. The Contractor warrants and guarantees that Goods delivered under this Agreement do not infringe any valid patent, copyright or trademark, foreign or domestic, owned or controlled by any other corporation, firm or person, and agrees to indemnify and save harmless the City and all of its elected and appointed officials, officers, employees, servants, representatives and agents (collectively the “Indemnitees”), from and against any and all claims, demands, causes of action, suits, losses, damages and costs, liabilities, expenses and judgments (including all actual legal costs) by reason of any claim, action or litigation arising out of any alleged or actual infringement of any patent, copyright or trademark, foreign or domestic, relating to the Goods supplied under this Agreement.

19. The Contractor represents and warrants that all Goods delivered under this Agreement shall comply with all applicable codes, statutes, by-laws, rules and regulations, or any federal, provincial, municipal or other competent authority for the time being in force, including any environmental laws and that the Goods are not dangerous to the environment or to person or health.

20. The Contractor will indemnify and save harmless the Indemnitees from and against all claims, demands, causes of action, suits, losses, damages and costs, liabilities expenses and judgments (including all actual legal costs) for damage to or destruction or loss of property, including loss of use, and injury to or death of any person or persons which any of the Indemnitees incur, suffer or are put to arising out of or in connection with any failure, breach or non-performance by the Contractor of any obligation of this Agreement, or any wrongful or negligent act or omission of the Contactor or any employee or agent of the Contractor.

CUSTOMS

21. Documentation for shipments of Goods from outside Canada shall be provided by a Contractor by airmail and shall include all documents as required by law or customary practice. All packages shall be marked as follows:

> "Upon arrival, please contact customs broker:
> Livingston International Inc.
> Telephone: 604-685-3555
> Fax: 604-605-8231
> Email: cst19@livingstonintl.com"

INSPECTIONS

22. If this Agreement pertains to the fabrication, assembly or other processing of the Goods, representatives of the City shall be permitted free access at all reasonable times for the purpose of inspection, testing or obtaining information as to the progress of the fabrication, assembly or processing.

SAFETY

23. If this Agreement includes any inspection, installation or other work on the City's premises by the Contractor, or representative or sub-contractor of the Contractor, all such activity shall be performed and undertaken in strict compliance with all applicable health and safety laws and regulations, including, without limitation, the Workers Compensation Act, the Occupational Health & Safety Regulation and the Hazardous Products Act, and also in strict compliance with any published and issued by the City for use at the City's premises. The Contractor shall provide the City with the Contractor's Workers Compensation Board registration number and a letter from the Workers Compensation Board confirming the Contractor is registered in good standing with the Workers Compensation Board and that all assessments have been paid to the date thereof prior to the City having any obligation to pay monies under this Agreement.

WHMIS/MSDS

24. The Contractor covenants and agrees to comply with all the Workers Compensation Board Occupational Health and Safety Regulations for hazardous materials and substances, and in particular with the "Workplace Hazardous Materials Information Systems (WHMIS)" Regulations. All "Material Safety Data Sheets (MSDS)" will be shipped along with the Goods and any future MSDS updates will be forwarded.

SHOP DRAWINGS

25. The City may require that shop drawings be submitted by the Contractor for review prior to the delivery of the Goods. The City may require that a qualified registered professional engineer stamp and approve a shop drawing prior to submission. Any review of shop drawings by the City will not relieve the Contractor from its obligation to deliver Goods in full compliance with all requirements of this Agreement.

WAIVER

26. Any failure of the City at any time or from time to time to enforce or require the strict keeping or performance of any of the terms and conditions contained in this Agreement shall not constitute a waiver of the terms and conditions and shall not affect or impair the terms or conditions in any way or the City's right at any time to avail itself of any remedies as the City may have for any breach or breaches of the terms and conditions.

APPLICABLE LAW

27. This Agreement shall be governed by and construed in accordance with the laws of the Province of British Columbia. The City and the Contractor accept the jurisdiction of the courts of British Columbia and agree that any action under this Agreement shall be brought in such courts.

NOTICES

28. Any notice, report or other document that either party may be required or may wish to give to the other should be in writing, unless otherwise expressly provided for, and will be deemed to be validly given to and received by the addressee:
    (a) by hand, on delivery;
    (b) by facsimile, on transmission; or
    (c) by mail, five calendar days after posting.
    The addresses for delivery will be as follows:

    (a) The City:
    Attention:

    (b) The Contractor:
    Attention:

MERGER AND SURVIVAL

29. The representations, agreements, covenants and obligations set out in this Agreement shall survive the delivery of the Goods and payment of the Purchase Price.

ENTIRE AGREEMENT

30. This Agreement, including any other documents expressly included by reference in this Agreement, contains the entire agreement of the parties regarding the provision of the Goods, and no understandings or agreements, oral or otherwise, exist between the parties except as expressly set out in this Agreement. This Agreement supersedes and cancels all previous agreements between the parties relating to the Goods.

31. In the event that the Contractor issues an invoice, packing slip, sales receipt, or any like document to the City, the City accepts the document on the express condition that any terms and conditions in it which constitute terms and conditions which are in addition to or which establish conflicting terms and conditions to those set out in this Agreement are expressly rejected by the City.

SIGNATURE

32. This Agreement may be executed in one or more counterparts all of which when taken together will constitute one and the same Agreement, and one or more of the counterparts may be delivered by fax transmission or as a pdf file.

- END OF PAGE -

ENUREMENT

33. This Agreement shall enure to the benefit of and be binding upon the respective successors and permitted assigns of the City and the Contractor.

This Quotation Agreement is executed by the Contractor this _____ day of _____, 201_.

CONTRACTOR

I/We have the authority to bind the Contractor.

_____
(Legal Name of Contractor)

_____ _____
(Signature of Authorized Signatory) (Signature of Authorized Signatory)

_____ _____
(Print Name and Position of Authorized Signatory) (Print Name and Position of Authorized Signatory)

This Quotation Agreement is executed by the City of Surrey this ____ day of _____, 201_.

CITY OF SURREY
by its authorized signatory:

_____
(Signature of Authorized Signatory)

_____
(Print Name and Position of Authorized Signatory)

SCHEDULE A – SPECIFICATION OF GOODS

SECTION 1 – INTRODUCTION

The City of Surrey intends to implement a Travel Time Information System within the City Limits. This Request for Quotation (RFQ) is for the supply of associated materials as shown on the drawings in in Schedule A-1 – Drawings and as described in the specifications herein.

SECTION 2 – QUOTATION BREAKDOWN

2.01 Dynamic Message Sign (DMS)

The unit price Quotation for each DMS should include the supply of the complete DMS assembly, as shown on the drawings in Schedule A-1 – Drawings, including the LED message display, mounting hardware, wiring, miscellaneous electrical components, vertical T-sections, Type-H sign mounting clamps, mounting frame, conduit, fittings and connectors on the sign assembly, and FAT. The unit price Quotation for DMS should also include the DMS control cabinet and should include the supply of the complete, assembled and factory acceptance tested control cabinet, as shown on the Drawings, including pole mounting brackets, mounting hardware, power distribution, power filtering, power supplies, National Transportation Communications for ITS Protocol (NTCIP) DMS controller, terminal blocks, din rail, fans, heater, thermostat, receptacles, network switch, surge protector and internal cabinet wiring.

2.02 Uninterruptible Power Supply (UPS) Cabinet

The unit price Quotation for each uninterruptible power supply (UPS) cabinet should include the supply of the complete, assembled and factory acceptance tested UPS cabinet, as shown on the drawings in Schedule A-1 – Drawings, including mounting hardware, power distribution, fans, heater mats, thermostat, UPS, automatic transfer switch, maintenance bypass switch, batteries, and internal cabinet wiring.

The unit price quotation for the UPS cabinet for DMS03 should also include a 5kVa, 600/120V transformer complete with a NEMA 3R enclosure to be installed on the side of the UPS cabinet, as shown on the drawings.

2.03 Shipping

The Quotation for shipping should include all costs for palletizing, labelling, shipping, and freight for delivery to a location in the Greater Vancouver area, as designated by the City of Surrey.

SECTION 3 – QUANTITIES

This RFQ includes the following quantities:

- DMS – 3
- UPS – 3

SECTION 4 – DMS MANUFACTURER REQUIREMENTS

This section describes the requirements for a dynamic message sign manufacturer to be selected under this contract. This section also details the product documentation that should be provided by the contractor.

Specifications identified with “shall” are mandatory. Specifications identified with “should” are preferred.

4.01 DMS Manufacturer Qualifications

It is preferred that the dynamic message sign manufacturer for this contract:

- Have been in the business of manufacturing large outdoor permanently mounted LED DMS, which are used to manage vehicular roadway traffic, for minimum period of ten (10) years prior to the contract bid date. An “LED” DMS contains display pixels constructed solely of high-intensity discrete LEDs.
- Have in operation a minimum of one thousand (1000) large outdoor permanently mounted LED DMS in North America as defined above. Each of these DMS should have successfully operated for a minimum period of one (1) year prior to the contract bid date.
- Have in operation as of the contract bid date a minimum of ten (10) independently owned and operated LED DMS systems. Each of the ten (10) systems should contain a minimum of ten (10) permanently mounted DMS that use the National Transportation Communications Intelligent Transportation System (ITS) Protocol (NTCIP) as their primary communication protocol. Each of the DMS signs should be communicating over dial-up telephone, cellular telephone, spread spectrum radio, or fiber optic networks.
- Have an in house Quality Management System (QMS) in place certified by an approved registrar to the latest standard of International Organization for Standardization (ISO) 9001.

Experience with manufacturing other types of electronic sign products may not satisfy the requirements of this DMS specification such as:

- Indoor signs of any size or type
- Portable or mobile signs of any size or type
- Neon signs
- Back-lit signs
- Rotating drum or plank signs
- LED lens Displays
- Blank out signs
- Any type of sign that is not pixilated and cannot be programmed to display a nearly infinite quantity of messages
- DMS that have a pixel technology comprised of something other than high-intensity light emitting diodes (LED). Examples of unacceptable technologies are incandescent lamp, liquid crystal, fiber optic, flip disk, flip-fiber combination, and flip-LED combination

- Outdoor electronic signs that are used for purposes other than roadway/motorway traffic management

4.02 Material, Manufacturing, and Design Standards

DMS provided for this contract shall comply with the following standards. If no revision date is specified, the most recent revision of the standard applies:

- **Sign Size** – The overall sign size and assembly shall not exceed 1600 mm high by 7050 mm wide and 500 mm deep.

- **Sign Weight** – The overall sign weight shall not exceed 750 kg.

- **General DMS Requirements** – The DMS shall be designed in accordance with National Electrical Manufacturers Association (NEMA) Standards Publication TS 4, Hardware Standards for Dynamic Message Signs (DMS), with NTCIP Requirements and additional requirements identified in the MoTI Electrical and Signing Material Standards for DMS Section 2300.

- **Aluminum Welding** – The DMS housing shall be designed, fabricated, welded, and inspected in accordance with the latest revision of American National Standards Institute (ANSI)/American Welding Society (AWS) D1.2 Structural Welding Code-Aluminum. All welding shall be performed by Canadian Welding Bureau (CWB) certified welders.

- **Electrical Components** – Electrical components shall be installed per CSA C22.2 No14 industrial control equipment standard.

- **Environmental Resistance** – Electrical enclosure to be certified Type 3R per CSA C22.2 No 94.1&2 or equivalent as approved by electrical safety authority. All sign display components shall be capable of withstanding harsh vibration and environmental Conditions and must meet the requirements of NEMA TS 4-2005. The sign display system shall operate in a minimum temperature range of -34°C to +74°C and a relative humidity range of 0 to 95%, non-condensing.

- **Product Electrical Safety** – The DMS and associated equipment and enclosures shall be listed by the Underwriters Laboratories (UL) and will bear the UL mark on the outside of the DMS enclosure. Control equipment and enclosures shall be listed as conformant to UL 1433 Standard for Control Centers for Changing Message Type Electric Signs. Failure to meet conformance will be cause for rejection.

- **Radio Frequency Emissions** – All equipment shall be designed in accordance with Federal Communications Commission (FCC) Part 15, Subpart B as a “Class A” digital device.

- **Maintenance Access and Safety** – The DMS equipment provided shall be compliant with all relevant Worksafe BC requirements.

- **Structural Integrity** – The DMS housing shall be designed and constructed to comply with all applicable sections of American Association of State Highway and Transportation Officials (AASHTO) Standard Specifications for Structural Supports for Highway Signs,

Luminaries and Traffic Signals, as well as the fatigue resistance requirements of National Cooperative Highway Research Program (NCHRP) Report 412, Fatigue-Resistant Design of Cantilevered Signal, Sign, and Light Supports.

- **Communication Protocols** – The sign controller hardware/firmware and DMS control software shall conform to the applicable National Transportation Communication for ITS Protocol (NTCIP) standards. Refer to the NTCIP section of this specification for detailed NTCIP requirements for this contract.

4.03 Quality Management System (ISO 9001 Certified)

The DMS manufacturer should have an in house Quality Management System (QMS) in place that is certified by an approved registrar to ISO 9001:2008 or the latest released standard of ISO 9001. ISO 9001 certification is a means of ensuring the DMS organization conforms to specific requirements through quality planning in accordance to the latest standard of ISO 9001.

The manufacturer's pre-build technical submittal should provide a copy of the company's ISO 9001 certification.

4.04 Customer Service Department

The DMS manufacturer shall have a customer service department that provides technical support and services for the manufacturer's DMS systems.
The manufacturer's customer service department shall have technical support help desk that may be contacted via telephone, e-mail and fax. The help desk shall be staffed during normal business hours at a minimum. The manufacturer shall also offer bench level repair services for failed components and stocking of most parts for replacement.

The manufacturer should have at least one trained and factory certified technical support personnel who reside locally in the Lower Mainland region. These local technical support personnel do not need to be employed directly by the manufacturer. Evidence of certification must be provided upon request.

The manufacturer should include a description of its available customer support services in the pre-build technical submittal, including a listing of local technical support personnel (name, company, contact number, number of years certified).

4.05 Manufacturing Automation Systems

The DMS manufacturer should utilize automated equipment in the manufacturing process. Automated systems shall be used for the following processes at a minimum: component insertion, soldering, circuit board washing, and conformal coating application.

4.06 Product Testing

The DMS manufacturer should provide documentation indicating that the DMS product has been tested to the standards listed below. It is acceptable for the testing to be performed on

scale-sized versions of the actual DMS provided that the test unit is functionally and structurally equivalent to the full size DMS.

Failure to conform to these testing requirements may be grounds for rejection. Rejected equipment may be offered for test or retest provided all non-compliant items have been corrected and tested or retested by the DMS manufacturer. Any corrections deemed necessary by the Engineer must be made by the DMS manufacturer, at no additional cost to the Department.

Product test reports should be submitted for the following testing:

- *NEMA Standards Publication TS 4, Hardware Standards for Dynamic Message Signs (DMS), with NTCIP Requirements* – Section 2, Environmental Requirements. Test report should detail results of mechanical vibration and shock, electrical noise and immunity, temperature, and humidity.
- Underwriters Laboratories (UL**),** *UL 1433 Standard for Control Centers for Changing Message Type Electric Signs*. The UL report number(s) for all DMS and control equipment manufactured by the DMS manufacturer should be submitted and the products should bear the UL mark.

The supplier should provide a record of each test performed including the results of each test. The report should include a record of the product test report and the test lab's representative that witnessed the tests, including the signature of the lab's representative. The test reports should be provided to the Engineer for review as part of the technical submittal.

Self-Certification

The DMS manufacturer should provide self-certification, including a statement of conformance and copies of test reports, indicating that the following tests have been performed and passed. Product test reports should be submitted for testing of the following National Transportation Communication for ITS Protocol (NTCIP) standards:

- *NTCIP 1201 NTCIP Global Object Definitions*
- *NTCIP 1203 Object Definitions for Dynamic Message Signs* (including Amendment 1)
- *NTCIP 2101 Point to Multi-Point Protocol Using RS-232 Subnetwork Profile.*

The NTCIP testing should have been completed using industry accepted test tools such as the NTCIP Exerciser, Trevilon's NTester, Intelligent Devices' Device Tester, and/or Frontline's FTS for NTCIP. The NTCIP test report(s) should include testing of sub-network communications functionality, all mandatory objects in all mandatory conformance groups, and a subset of the remaining objects.

4.07 DMS Housing Structural Certification

A Professional Engineer registered in the Province of British Columbia shall analyze the DMS structural design and shall certify that the DMS:

- Will withstand the temporary effects of being lifted by the lifting eyebolts provided
- Will comply with the applicable requirements of AASHTO Standard Specifications for Structural Supports for Highway Signs, Luminaires and Traffic Signals
- Complies with the fatigue resistance requirements of NCHRP Report 412, Fatigue-Resistant Design of Cantilevered Signal, Sign, and Light Supports.

The Professional Engineer must analyze the complete DMS structural design. This includes the housing, mounting brackets, and lifting eyebolts, as well as the bracket-to-housing mounting hardware (nuts, bolts, washers, direct tension indicators, etc.) provided by the DMS manufacturer. Analysis must include, but shall not be limited to:

- The quantity and type of lifting eyebolts to be provided
- The quantity and type of mounting brackets to be provided
- The quantity and type of hardware (nuts, bolts, washers) used to attach the mounting brackets to the DMS
- Verification that no dissimilar metals problem will exist and/or affect the structural integrity of the DMS-to-bracket attachment points
- A recommendation of the number of attachment points, as well as the attachment locations, that the installing contractor should use when mounting the DMS to its support structure

The DMS manufacturer shall include a signed and sealed copy of the Professional Engineer's certification, including all supporting calculations, with the shop drawings submission. Failure to provide P.Eng. calculations may be cause for rejection.

4.08 Shop Drawing Submittal

The DMS manufacturer shall provide a complete shop drawing submittal according to the shop drawing submittal schedule and shall not proceed with DMS manufacture until the Engineer has approved the submittal. The DMS manufacturer shall provide one (1) copy of the submittal in electronic format.

The submittal must include:

- All DMS manufacturer qualification information, as specified herein
- DMS shop drawing, including an illustration of the recommended installation method
- AC power requirements, including the number of legs, current draw per leg, and typical site power consumption
- Major DMS schematics in block diagram form, including AC power distribution inside and outside the DMS, DC power distribution within the DMS, and control signal distribution inside and outside the DMS
- Drawings of major DMS components, including LED display modules, driver boards, control/logic components, environmental control assemblies, DMS sign controller, control equipment cabinet assembly, and control cabinet mounting footprint
- Catalog cut sheets for major DMS components, including front face paint material, polycarbonate face material, LEDs, regulated DC power supplies, circuit board conformal coating material, hookup wire, signal cable, surge suppression devices, panel

board, circuit breakers, utility outlets, sign controller, ventilation/cooling fans, heaters, ventilation filter, thermostats, and any other major system components
- Test reports and certification for all items identified in the “Product Testing” specifications herein
- DMS Housing Structural Certification as noted herein.

Upon the City’s request, the shop drawing submittal should also include five (5) references from jurisdictions within North America that have had NTCIP-compliant DMS from the manufacturer installed for a minimum of five (5) years and project information for all of the manufacturer’s DMS customers of the last five (5) years, including:

- Equipment owner/operator agency name
- Contact person name, telephone number, fax number, and email address
- DMS system name and location of operations control center (project name/number, roadway name/number, state, county, and country)
- DMS commissioning date (first date of successful on-site operation)
- DMS quantity
- DMS display pixel technology (LED, fiber optic, flip disk, etc.)
- DMS display matrix size (pixel rows by pixel columns) and type (full matrix, line matrix, or discrete character)
- DMS housing access type (walk-in, front, rear, or other specific access type)
- Communications protocol used (NTCIP or proprietary; if proprietary, provide a name or description)
- Type of communications backbone used (telephone, fiber optic, direct, etc.)
- NTCIP compliance test reports prepared by independent testing companies, including contact information

The pre-build submittal should also include the following background information about the DMS manufacturer:

- Names and qualifications of the primary project team members, including the following: sales person, project manager, product manager, application engineer, and manufacturing manager
- Number of years in business under the current corporate name
- Copy of the DMS manufacturer’s in-house quality management system
- Copy of the DMS manufacturer’s certified welding procedure
- General corporate literature
- DMS product literature, including detailed product specifications sufficient to demonstrate compliance with the product requirements.
- A compliance table listing each sub-section of the product specification included in the DMS Manufacturer Requirements section and indicating the level of compliance the DMS achieves against each sub-section. Compliance shall be rated as follows:
    - Fully Comply. The product fully complies with the specification.
    - Partially Comply. The product complies with some of the specification, but does not meet all requirements. Indicate which aspects of the specification are not met.
    - Non-Compliance. The product does not comply with the specification.

Failure to provide complete and accurate submittal information, as specified herein, may be cause for rejecting the DMS manufacturer.

SECTION 5 – DMS CONSTRUCTION AND OPERATION

This section describes the minimum construction and operational functionality requirements for the dynamic message signs (DMS) to be supplied under this contract. The contractor shall provide all the materials, software, and services necessary to install DMS and associated equipment that fully comply with the functional requirements specified herein, including incidental items that may have been inadvertently omitted.

5.01 Intent Disclaimer

The City acknowledges there may be alternative methods to meet the intent of the specification without meeting the exact wording of the specification. The City encourages DMS Manufacturers to propose advances in technology and alternates to meet the City's intent. Each deviation of the written specification must be clearly shown and the benefits explained. The City reserves the right to reject any specification alternate without reason to the DMS Manufacturer.

5.02 General Specifications

The DMS housing should provide front service access for all LED display modules, electronics, environmental control equipment, air filters, wiring, and other internal DMS components.

It is preferred that the DMS contain a full display matrix measuring a minimum of 48 rows high by 304 pixel columns wide. The matrix shall display messages that are continuous, uniform, and unbroken in appearance to motorists and travelers.

Each display pixel shall be composed of multiple red, green, and blue LEDs. Other pixel technologies, such as fiber optic, flip disk, combination flip disk-fiber optic, combination flip disk-LED, liquid crystal, LED lenses, and incandescent lamp, will not be accepted.

The pixel matrix should be capable of displaying at minimum alphanumeric 152 mm high characters in accordance with the definition defined by NEMA TS 4 Hardware Standards for Dynamic Message Signs Standards. The pixel matrix should be capable of displaying three (3) lines of 30 alphanumeric characters per line with a minimum character height of 229 mm, a minimum interline spacing of six (6) pixels, and a minimum character spacing of two (2) pixels.

The DMS should be able to display messages composed of any combination of alphanumeric text, punctuation symbols, and graphic images across multiple frames.

Legibility

DMS messages should be legible within a distance range of 22.9 m to 137 m from the DMS display face under the following conditions:

- When the DMS is mounted so its bottom side is positioned between 1,524 mm and 6,096 mm above a level roadway surface
- Whenever the DMS is displaying alphanumeric text that is 236 mm high
- 24 hours per day and in most normally encountered weather conditions
- During dawn and dusk hours when sunlight is shining directly on the display face or when the sun is directly behind (silhouetting) the DMS
- When viewed by motorists and travelers that have 20-20 corrected vision
- When the motorist eye level is 914 mm to 3,658 mm above the roadway surface.

Power Requirements

Maximum AC power should not exceed 1906 watts, when the following circuits are operational and fully loaded:

- LED display pixel matrix, with 100% of the pixels operating at their maximum possible drive current
- DMS environmental control system
- DMS sign controller

Typical DMS AC operating power should not exceed 1036 watts with the following circuit loadings:

- LED display pixel matrix, with 38% of the pixels operating at their maximum possible drive current
- DMS sign controller

DMS should operate from a 120/240 VAC, 60Hz, single-phase power source, including neutral and earth ground (3 wire plus ground).

Sign Construction

The DMS housing shall be constructed to have a neat, professional appearance. The housing shall protect internal components from rain, ice, dust, and corrosion in accordance with NEMA enclosure Type 3R standards, as described in NEMA Standards Publication 250, Enclosures for Electrical Equipment (1000 Volts Maximum).

The DMS housing bottom side shall contain small weep holes for draining any water that may accumulate due to condensation. Weep holes and ventilation/exhaust hoods shall be screened to prevent the entrance of insects and small animals.

DMS and sign controller components should operate in a minimum temperature range of -34ºC to +74ºC and a relative humidity range of 0 to 99%, non-condensing. DMS and sign controller components shall not be damaged by storage at or temporary operational exposure to a temperature range of -40ºC to +85ºC.

External DMS component hardware (nuts, bolts, screws, standoffs, rivets, fasteners, etc.) shall be fabricated from hot dipped or mechanically galvanized steel, stainless steel, aluminum,

nylon, or other durable corrosion-resistant materials suitable for the roadway signage application.

DMS and sign controller components shall be 100% solid-state, except for the environmental control fans and thermostats. All high voltage electrical components (exceeding 24 VDC) used in the DMS and the sign controller shall be UL (Underwriter's Laboratory) listed and meet all local NEC codes applicable to DMS applications.

The presence of ambient radio signals and magnetic or electromagnetic interference, including those from power lines, transformers, and motors, shall not impair the performance of the DMS system. The DMS system shall not radiate electromagnetic signals that adversely affect any other electronic device, including those located in vehicles passing underneath or otherwise near the DMS and its sign controller.

5.03 DMS Assembly

The DMS should be as shown on the Drawings with the following additional specification:

- One (1) Type H sign mounting clamp per sign support T-Section conforming to the current MoTI Electrical and Signing Material Standards and must be supplied from manufacturers on the current version of the MoTI's "Recognized Products List."

5.04 DMS Sign Housing

The major structural frame members in the DMS housing should consist of aluminum extrusions made from 6061-T6 aluminum alloy. Minor structural frame members should consist of formed sheet stock made from 5052-H32 aluminum alloy. The rear of the DMS housing exterior should be covered with aluminum sheets made from 5052-H32 aluminum alloy. This external aluminum skin should be attached to the structural framework using a proven method of attachment.

DMS housing right, left, front, and rear walls should be vertical. The top and bottom sides should be horizontal.

DMS structural assembly hardware (nuts, bolts, washers, and direct tension indicators) should be galvanized A325 high-strength steel and should be appropriately sized for the application.

5.05 Mounting Arrangement

Multiple mounting brackets in the form of Z-bar extrusions should be bolted to the DMS housing exterior rear wall to facilitate attachment of the DMS to the support structure. Mounting brackets should be:

- Extruded from aluminum alloy number 6061-T6
- Attached to the DMS structural frame members, not just the exterior sheet metal
- Installed at the DMS manufacturer's factory
- Attached to the DMS using mechanically galvanized A325 high-strength steel bolts

- Attached to the DMS using direct tension indicators to verify that mounting hardware is tightened with the proper amount of force
- Installed such that all bracket-to-DMS attachment points are sealed and water-tight
- Designed and fabricated such that the installing contractor can drill into them without penetrating the DMS housing and compromising the housing's ability to shed water

5.06 Front Face Construction

The DMS front face should be constructed with multiple vertically hinged rigid door panels, each of which contains a full-height section of the LED display matrix. The door panels should be fabricated using aluminum sheeting on the exterior and polycarbonate sheeting on the interior of the panel.

The DMS housing shall provide safe and convenient access to all modular assemblies, components, wiring, and subsystems located within the DMS housing. All of those internal components should be removable and replaceable by a single technician.

Doors

It is preferred that one (1) access door be provided for a section of the sign housing. These doors should be vertically hinged and should contain a section of the sign's front face. The doors should swing out from the face to provide access to the cabinet interior. Each door should extend the full height of the display matrix.

To prevent open doors from blowing in wind, they should each have a retaining latch mechanism to hold the door open at a 90-degree angle.

Each door should form the face panel for a section of the sign. The LED modules should be mounted to the door and be removable from the door when in the open position. Other sign components, such as power supplies, wiring, etc. should be located inside the sign cabinet and be accessible through the door opening.

It is preferred that each door contain a minimum of two (2) captive-type latches to lock them in the closed position. These latches should be captive to prevent them from falling. They should pull the door tight and compress a gasket located around the perimeter of each door. They should also be capable of providing leverage to easily release the gasket seal when opening the doors. The gasket shall prevent water from entering the cabinet around the doors.

Face Panels

Front face panels shall provide a high-contrast background for the DMS display matrix. The aluminum mask of each door panel shall be painted black and shall contain an opening for each pixel. Openings shall be large enough to not block any portion of the viewing cones of the LEDs.

It is preferred that each door panel has a single polycarbonate sheet attached securely to the inside of the aluminum panel. The polycarbonate sheet should cover all of the pixel openings. The polycarbonate should be sealed to prevent water and other elements from entering the DMS. The polycarbonate should contain UV inhibitors that protect the LED display matrix from the effects of ultraviolet light exposure and prevent premature aging of the polycarbonate itself. The use of a plastic lens system will not meet the requirements and will be cause for rejection.

LED display modules should mount to the inside of the DMS front face door panels. No tools should be needed for removal and replacement of LED display modules.

DMS front face borders (top, bottom, left side, and right side), which surround the front face panels and LED display matrix, shall be painted black to maximize display contrast and legibility.

In the presence of wind, the DMS front face shall not distort in a manner that adversely affects LED message legibility.

5.07 Exterior Finish

DMS front face panels and front face border pieces should be coated with semi-gloss black polyvinylidene fluoride (PVDF) applied in accordance to American Architectural Manufacturers Association (AAMA 2605) which has an expected outdoor service life of 10 to 15 years.
All other DMS housing surfaces, including the DMS mounting brackets, should be natural mill-finish aluminum.

5.08 LED Display Modules

The DMS shall contain LED display modules that include an LED pixel array, and LED driver circuitry. These modules should be mounted adjacently in a two-dimensional array to form a continuous LED pixel matrix. Each LED display module should be constructed as follows:

- All LED modules should be manufactured and designed to Association Connecting Electronics Industries (IPC) standards.
- Each LED display module should be mounted to the rear of the display's front face panels using durable non-corrosive hardware. No tools should be required for module removal and replacement. The modules should be mounted such that the LEDs emit light through the face panel's pixel holes and such that the face panel does not block any part of the viewing cone of any of the LEDs in any pixels. The use of light enhancing lenses to achieve defined viewing cone could be cause for rejection.
- LED display module power and signal connections should be a quick-disconnect locking connector type. Removal of a display module from the DMS should not require a soldering operation.
- All exposed metal on both sides of each printed circuit board, except connector contacts, should be protected from water and humidity exposure by a thorough application of conformal coating. Bench level repair of individual components, including discrete LED replacement and conformal coating repair, should be possible.

- Individual addressing of the each LED display module should be configured via the communication wiring harness and connector. No on-board addressing jumpers or switches should be allowed.
- Removal or failure of a single LED module should not affect the operation of any other LED module or sign component. Removal of one or more LED modules should not affect the structural integrity of any part of the sign.
- It should not be possible to mount an LED display module upside-down or in an otherwise incorrect position within the DMS display matrix.
- All LED display modules, as well as the LED pixel boards should be identical and interchangeable throughout the DMS.

5.09 LED Pixels

Each LED module should contain a printed circuit board to which LED pixels are soldered. The LED pixel matrix should conform to the following specifications:

- The distance from the center of one pixel to the center of all adjacent pixels, both horizontally and vertically, should be ~20 mm.
- Each pixel should consist of a minimum of one (1) independent string of discrete LEDs for each color. All pixels should contain an equal quantity of discrete LEDs
- The failure of an LED string or pixel should not cause the failure of any other LED string or pixel in the DMS.
- Each pixel should contain the quantity of discrete LEDs needed to output white colored light at a minimum luminous intensity of 12,400 candelas per square meter when measured using a photometric meter through the DMS front face panel assembly. Failure to conform to the requirements may be cause for rejection.
- The base of the discrete LEDs should be soldered so that they are parallel to the surface of the printed circuit board. The longitudinal axis of the LEDs should be perpendicular to the circuit board.

5.10 Discrete LEDs

DMS pixels should be constructed with discrete LEDs manufactured by a reputable Manufacturer such as Avago Technologies (formerly Agilent Technologies), Nichia Corporation, OSRAM, CREE, or EOI. Discrete LEDs should conform to the following specifications:

- All LEDs should have a nominal viewing cone of 30 degrees with a half-power angle of 15 degrees measured from the longitudinal axis of the LED. Viewing cone tolerances should be as specified in the LED manufacturer's product specifications and should not exceed +/- 5 degrees. Using optical enhancing lenses with 15 degree LED's will not conform to 30 degree half-power viewing cone specifications and will be cause for rejection.
- Red LEDs should utilize Aluminum Indium Gallium Phosphide (AlInGaP) semiconductor technology and should emit red light that has a peak wavelength of 618-630nm.
- Green LEDs should utilize Indium Gallium Nitride (InGaN) semiconductor technology and should emit green light that has a peak wavelength of 519-539nm.
- Blue LEDs should utilize InGaN semiconductor technology and should emit blue light that has a peak wavelength of 440-480nm.

- The LED packages should be fabricated from UV light resistant epoxy.
- The LED manufacturer should perform color sorting of the bins. Each color of LEDs should be obtained from no more than two (2) consecutive color “bins” as defined by the LED manufacturer.
- The LED manufacturer should perform intensity sorting of the bins. LEDs should be obtained from no more than two (2) consecutive luminous intensity “bins” as defined by the LED manufacturer.
- The various LED color and intensity bins should be distributed evenly throughout the sign and should be consistent from pixel to pixel. Random distribution of the LED bins should not be accepted.
- The LED manufacturer should assure color uniformity and consistency on the LED display face within the 30-degree cone of vision. Inconsistent color shifts or intensity will be cause for rejection.
- All LEDs used in all DMS provided for this contract should be from the same manufacturer and of the same part number, except for the variations in the part number due to the intensity and color.
- The LEDs should be rated by the LED manufacturer to have a minimum lifetime of 100,000 hours of continuous operation while maintaining a minimum of 50% of the original brightness.

5.11 Pixel Drive Circuitry

Driver circuitry should be provided for each LED pixel module and should individually control all pixels on that module. The modules should conform to the following specifications:

- Each LED driver board should be microprocessor-controlled and should communicate with the sign controller on a wire or fiber optic communication network using an addressable network protocol. The microprocessor should process commands from the sign controller to display data, perform diagnostic tests, and report pixel and diagnostic status.
- Constant current LED driver ICs should be used to prevent LED forward current from exceeding the LED manufacturer’s recommended forward current whenever a forward voltage is applied. To maximize LED service life, LED drive currents should not be allowed that exceed the manufacturer’s recommendations for the 100,000-hour lifetime requirement.
- The LED pixels should be directly driven using pulse width modulation (PWM) of the drive current to control the display intensity. This LED driver circuitry should vary the current pulse width to achieve the proper display intensity levels for all ambient light conditions. The drive current pulse should be modulated at a frequency high enough to provide flicker-free operation and a minimum of 200 brightness levels.
- Each LED driver circuit should be powered by 24 VDC from external regulated DC power supplies.
- The voltage of each power input should be measured and reported to the sign controller as pass fail upon request. Each driver circuit should also contain a status LED for the power supply that indicates which voltage input is being used.
- The LED driver circuitry should be able to detect that individual LED strings or pixels are stuck off and should report the pixel status to the sign controller upon request.

5.12 Regulated DC Power Supplies

The LED pixel display modules should be powered with auto-ranging regulated switching power supplies that convert the incoming AC to DC at a nominal voltage of 24 volts DC. Power supplies should be wired in a redundant configuration that uses multiple supplies for the DMS display matrix.

Power supplies should be redundant and rated such that if one supply fails, the remaining supply(s) should be able to operate 100% of the pixels in that display region at 100% brightness when the internal DMS air temperature is 60ºC or less.

Each power supply should receive 120VAC power from separate circuits on separate circuit breakers, such that a single tripped breaker will not disconnect power from more than one supply.

The power supplies should be sufficient to maintain the appropriate LED display intensity throughout the entire operating input voltage range.
The power supplies used to power the LED pixel modules must be identical and interchangeable throughout the DMS.

The power supplies used to power the LED pixel modules should have an application of acrylic conformal coating to protect from the environmental elements and must be UL listed or recognized.

The regulated DC power supplies should conform to the following specifications:

- Nominal output voltage of 24 VDC +/- 10%
- Nominal maximum output power rating of 1000 watts
- Operating input voltage range should be a minimum of 90 to 264 VAC
- Operating temperature range should be a minimum of -34ºC to +74ºC
- Maximum output power rating should be maintained over a minimum temperature range of -34ºC to +60ºC
- Power supply efficiency should be a minimum of 80%
- Power factor rating should be a minimum of 0.95
- Power supply input circuit should be fused
- Automatic output shut down and restart if the power supply overheats or one of the following output faults occurs: over-voltage, short circuit, or over-current
- Power supplies should be UL listed
- Printed circuit boards should be protected by an acrylic conformal coating

5.13 Control Systems

The DMS shall include a DMS controller as specified in the Requirements for DMS Controllers section herein.

5.14 Environmental Monitoring Systems

The DMS should include sensors that monitor and report ambient (external) light level and temperature, as well as the internal temperature and humidity.

Ambient Light Measurement

Sensors that measure the outdoor ambient light level at the DMS site should be mounted in-line with the DMS housing walls. This ambient light measurement system should consist of three (3) electronic light sensors.

Two of the light sensors should be placed such that they measure the ambient light levels striking the front and rear of the DMS. The third light sensor should be mounted to the floor of the DMS housing and should face the ground. The DMS sign controller should continuously monitor the light sensors and adjust the LED display matrix intensity to a level that creates a legible message on the DMS face.

Ambient Temperature Measurement

A minimum of one (1) ambient temperature sensor should be mounted to the rear wall or bottom of the DMS housing. The sensor should be placed such that it is never in direct contact with sunlight. The external temperature sensor reading should be continuously monitored by the DMS sign controller and should be reported to the DMS control software upon request.

Internal Temperature Measurement

The DMS should contain a minimum of one (1) temperature sensor. The sensor(s) should measure the temperature of the air in the cabinet over a minimum range of -40ºC to +80ºC. The internal temperature sensor output should be continuously monitored by the DMS sign controller and should be reported to the DMS control software upon request.

Internal Humidity Measurement

The DMS should contain one (1) sensor that measures the relative humidity of the air inside the DMS housing. The sensor should monitor the humidity from 0 to 100%. The humidity sensor output should be continuously monitored by the DMS sign controller and should be reported to the DMS control software upon request.

5.15 Interior DMS Environmental Control

The DMS should contain systems for cabinet ventilation and safe over-temperature shutdown.

Housing Ventilation System

The DMS should contain an electronically controlled ventilation system and a failsafe thermostat designed to keep the internal DMS components safe when the outdoor ambient temperature is 46°C or less.

The ventilation system should consist of two or more air intake ports. Each intake port should be covered with a filter that removes airborne particles measuring 500 microns in diameter and larger. One or more ball bearing-type fans should be mounted at each intake port. These fans should positively pressure the DMS housing.

Fans and air filters should be removable and replaceable from inside the DMS housing.

Each primary ventilation fan should contain a sensor to monitor its rotational speed, measured in revolutions per minute. The fan speed should be reported via a CAN (controller area network) communication network to the sign controller upon request.

One exhaust port should be provided for each air intake port. All exhaust port openings should be screened to prevent the entrance of insects and small animals.

An aluminum hood attached to the rear wall of the DMS should cover each air intake and exhaust port. All intakes and exhaust hoods should be thoroughly sealed to prevent water from entering the DMS.

For regions identified that experience regular high ambient temperatures, the addition of pixel fans should be incorporated into the design to prevent thermal dimming of the modules.

Over Temperature Safety Shutdown

The DMS should automatically shut down the LED modules to prevent damaging the LEDs if the measured internal cabinet air temperature exceeds a maximum threshold temperature.

5.16 Sign Controller Signal Interface

It is preferred that the communication signals from the sign controller to the DMS use fiber optic cable with the following specifications:

- 50.0/125 µm diameter
- LC-style connectors
- Rated for indoor/outdoor use
- UL-rated
- PVC outer jacket
- Tight buffer inner jacket
- Operating temperature range: -40ºC to +85ºC

A minimum of six (6) fibers should be provided with one (1) for controller to sign commands, one (1) for sign to controller responses, and four (4) spares.

5.17 Wiring and Power Distribution

Power and Signal Entrances

Two threaded conduit hubs should be located on the rear or side wall of the DMS housing. One hub should be for incoming AC power and the other should be for incoming DMS signal cabling or a communications line.

Panel Board

It is preferred that the DMS contain a power panel board and circuit breakers that meet the following minimum requirements:

- Service entrance-rated
- Minimum of 8 circuit breaker mounting positions
- Short circuit ratings of 10,000 amps and 10,000 amps for the main and branch circuits, respectively
- UL listed panel board and circuit breakers

Internal Wiring

Wiring for LED display module control, environmental control circuits, and other internal DMS components should be installed in the DMS housing in a neat and professional manner. Wiring should not impede the removal of display modules, power supplies, environmental control equipment, and other sign components. Wires should not make contact with or bend around sharp metal edges. All wiring should conform to CEC requirements.

Earth Grounding

The DMS manufacturer should provide one earth ground lug that is electrically bonded to the DMS housing. The lug should be installed near the power entrance location on the DMS housing's rear wall. The DMS installation contractor should provide the balance of materials and services needed to properly earth ground the DMS. All earth grounding shall conform to CEC requirements.

5.18 Transient Protection

The DMS and sign controller signal and power inputs should be protected from electrical spikes and transients as follows:

Sign AC Power

The AC power feed for all equipment in the sign housing shall be protected at the panel board by a parallel-connection surge suppresser rated for a minimum surge of 40 kA. This device shall conform to the following minimum requirements:

- Withstand a peak 100,000-ampere surge current, 40kA L-N, 40kA L-G

- Designed, manufactured, & tested consistent with: ANSI/IEEE C62.41.1-2002, C62.42.2-2002C62.45-2002, and C62.72-2016, NEC 285, and IEC 61643, CE
- Less than 1 nanosecond response time
- Temperature range of -40ºC to +85ºC
- Approximate dimensions of 93 mm wide by 210 mm long by 76 mm high
- High Energy Parallel Deign for Category C3 & C-High Application, plus B & A
- UL listed to: UL 1449 Fourth Edition, CSA 22.2 No 269.2

5.19 DMS Standard of Acceptance

Standard of Acceptance for DMS: Daktronics Vanguard VF-2420-48x304-20-RGB.

SECTION 6 – DMS CONTROLLERS

This section describes the minimum specifications for the dynamic message sign (DMS) controllers.

6.01 General Requirements

Each DMS shall be controlled and monitored by a sign controller. The sign controller should be a stand-alone microprocessor-based system, which does not require continuous communication with DMS control software in order to perform most DMS control functions. The sign controller should meet the following operational requirements:

- Communicate using embedded NTCIP protocol
- Contain memory for storing changeable and permanent messages, schedules, and other necessary files for controller operation
- Include a front panel user interface graphical LCD and keypad for direct operation and diagnostics as described herein
- Contain a minimum of three (3) NTCIP-compliant serial communication ports
- Have the ability to play volatile messages
- Contain a minimum of two (2) NTCIP-compliant Ethernet port with RJ45 connector
- Contain DMS-specific control firmware (embedded software) that should monitor all external and internal sensors and communication inputs and control the display modules as directed by external control software and the front panel interface

NTCIP should be natively supported in the DMS controller. External protocol converter or translator devices should not be allowed.

6.02 Controller Location

The sign controller and associated communication equipment should be installed inside the pole-mounted DMS control cabinet attached to the DMS support structure.

6.03 Environmental

The sign controller shall meet the following environmental requirements defined in *NEMA Standards Publication TS 4, Hardware Standards for Dynamic Message Signs (DMS), with NTCIP Requirements.*

6.04 Mechanical and Electrical

It is preferred that the sign controller meets the following electrical and mechanical requirements:

- Mount in a standard EIA 480 mm equipment rack with a maximum 4U space requirement
- Weigh no more than 5.44 kg, including its enclosure
- Consume no more than 30 watts of power
- Powered by an internal regulated DC power supply capable of operating on 120VAC or 240VAC at both 50Hz and 60Hz
- All printed circuit boards should be sealed with an acrylic conformal coating

6.05 Operational Requirements

Front Panel User Interface

The sign controller's front panel should include a menu driven, 16-button a keypad, and a minimum 480x272 graphical LCD. These devices should be used to perform the following functions with the sign controller and DMS:

- Monitor the current status of the sign controller, including the status of all sensors and a RGB what-you-see-is-what-you-get (WYSIWYG) representation of the message visible on the display face
- Perform diagnostics testing of various system components, including pixels, power systems, sensors, and more
- Activate, create, preview, and delete messages stored in memory
- Blank the sign
- Start and stop the schedule
- Configure display parameters, including display size and color technology
- Configure date and time
- Configure communications port settings and NTCIP options
- Configurable level of password protection per user
- Select automatic or manual brightness mode of operation

Memory

The sign controller should have non-volatile electronically changeable memory. This memory should be formed by flash or battery-backed static RAM integrated circuits that retain the data in memory for a minimum of 30 days following a power loss. This changeable memory should be used to store messages and schedules. It is preferred that the controller memory be a minimum of 2G RAM and 8GB storage.

Internal Clock

The DMS sign controller should contain a computer-readable clock that has a battery backup circuit. The battery should keep the clock operating properly for at least 30 days without external power, and the clock should automatically adjust for daylight savings time and leap year using hardware, software, or a combination of both. The clock should be set electronically by the sign controller microprocessor and should be accurate to within one (1) minute per month.

6.06 Communications

All remote communication ports should be NTCIP-compatible as defined in the “Requirements for NTCIP Compatibility” section of these specifications.

Communication Modes

The DMS sign controller should be able to receive instructions from and provide information to a computer containing DMS control software using the following communication modes:

- Remotely via direct or dial-up communications with a remotely located computer. The system communications backbone, as well as all field modems or signal converters, should provide the DMS sign controller with an RS232 and Ethernet signal.
- Locally via direct connection with a laptop computer that is connected directly to the sign controller using an RS232 null modem or Ethernet connection.

Serial Communication Ports

The DMS sign controller should contain a minimum of three (3) NTCIP-compatible RS232 communication ports. These ports should support multiple communication interfaces, including, but not limited to, direct null-modem (for local laptop control), dial-up and leased-line modems, radio systems, cellular modems, and fiber optic modems. The RS232 ports should all have standard DB9M connectors.

The baud rate, connection type, and NTCIP communication protocol should be configurable. Each port should support all typical serial baud rates ranging from 1200 to 115,200 baud. All three ports should be capable of supporting either of the following sub network profiles: NTCIP 2101 Point to Multi-Point Protocol (PMPP). They should also be capable of supporting either NTCIP 2201 (Null) or NTCIP 2202 (Internet) transport profiles. Only one each of the transport and sub network profiles should be active at any time on each port.

Ethernet Port

The DMS sign controller shall contain a minimum of one (1) 10/100Base-T Ethernet communication port. This port shall be available for communicating from the central control system to the DMS sign controller when an Ethernet network is available. The Ethernet port shall have a standard RJ45 connector.

Communications on the Ethernet port shall be NTCIP-compatible using the NTCIP 2202 Internet transport profile and the NTCIP 2104 Ethernet sub network profile. This shall permit the controller to be operated on any typical Ethernet network using the TCP/IP and UDP/IP protocols.

Controller Addressing

The DMS sign controller should use whatever addressing scheme is appropriate for the NTCIP network types used for communications. The controller addressing should be configurable through the front panel user interface.

NTCIP 2101 (PMPP) networks should be configured with an address in the range 1 to 255 with a default address of 1. NTCIP 2104 (Ethernet) networks should use a static IP address. Both the IP address and subnet should be configurable.

Transient Protection

The RS232 and Ethernet communication ports in the DMS sign controller should be protected with surge protection between each signal line and ground. This surge protection should be integrated internally within the controller.

6.07 DMS Control Outputs

It is preferred that the DMS sign controller transmit and receive data packets to and from the DMS via dedicated fiber optic cables. This network should communicate with all sensors, drivers, and other devices utilizing a CAN (controller area network) bus network running throughout the DMS.

Data transferred should include pixel states, sensor values, and I/O readings from various devices, such as door sensors and power supply monitors. Pixel data should include the states to be displayed on the sign face as well as diagnostic data retrieved from the LED drivers.

6.08 Messaging

The DMS controller should have the ability to display messages on the DMS display face as required herein.

Message Presentation on the DMS Display Matrix

The sign controller should control the LED drivers in a manner that causes the desired message to display on the DMS sign. At a minimum, the sign controller should support the following features as described in the DMS specification:

- Display of alpha numeric characters, including letters, numbers, and punctuation
- Selection of particular character fonts style

- Selection of colour
- Horizontal alignment of text on the display, including left, center, and right justification
- Vertical alignment of text on the display, including top, middle, and bottom justification
- Adjusting the spacing horizontally between characters or vertically between lines of text
- Alternating between pages of a multiple-page message
- Display of graphic bitmaps of various sizes up to and including the size of the entire DMS matrix

Message Effects

The DMS should be able to display messages using the following types of effects:

- **Static Message** – The selected message is displayed continuously on the sign face until the sign controller blanks the sign or causes the display of another message
- **Flashing Message** – All or part of a message is displayed and blanked alternately at rates between 0.1 seconds and 9.9 seconds. The flash rate is user programmable in increments of 0.1 seconds
- **Scrolling Message** – The message moves across the display face from one side to the other. The direction of travel is user selectable as either left-to-right or right-to-left
- **Multiple-Page Message** – A message contains up to six different pages of information, with each page filling the entire pixel matrix. Each page's display time is user programmable from 0.1 seconds to 25.5 seconds, and adjustable in increments of 0.1 seconds.

Message Activation

Messages should be activated on a DMS in three ways:

- **Manual** – An operator using the front panel LCD/keypad interface or NTCIP-compatible control software manually instructs a particular message to be activated.
- **Schedule** – The internal time-based scheduler in the DMS may be configured to activate messages at programmable times and dates. Prior to activation, these messages and their activation times and dates should be configured using the control software.
- **Events** – Certain events, like a power loss, may trigger the activation of pre-configured messages when they occur. These events must be configured using the control software.

A displayed message should remain on the sign until one of the following occurs:

- The message's duration timeout expires
- The controller receives a command to change the message
- The controller receives a command to blank the sign
- The schedule stored in the controller's memory indicates that it is time to activate a different message
- A special event, such as a loss of communication, occurs that is linked to message activation

It should be possible to confer a “priority” status onto any message, and a command to display a priority message should cause any non-priority message to be overridden.

Schedule Activation

The DMS sign controller should support the activation of messages based on a time/date-based schedule. The format and operation of the message scheduler should be per the NTCIP 1201 and NTCIP 1203 standards.

Display of Alphanumeric Text

It is preferred that the DMS sign controller support the storage and use of a minimum of twelve (12) font sets with which messages can be formatted and displayed. Each font should support up to 255 characters. All text font files should include the following characters:

- The letters “A” through “Z”, in both upper and lower case
- Decimal digits “0” through “9”
- A blank space
- Eight (8) directional arrows
- Punctuation marks, such as: . , ! ? – ‘ ’ “ ” : ;
- Special characters, such as: # & * + / ( ) [ ] < > @

The DMS supplier should provide the DMS controller with the following fonts preinstalled. The controller should support changing or replacing these fonts from the central software using NTCIP.

6.09 DMS Intensity Control

The DMS controller should provide means to change the brightness of the display matrix manually or automatically. The manual control will allow the user to select one of at least 100 intensity levels, which will be communicated to the LED drivers in the DMS. The brightness should remain at that level until the user changes the level or sets the controller to automatic mode.

The automatic intensity control mode will monitor the ambient light sensors of the DMS and will use a mathematical algorithm to automatically select one of the 100 or more intensity levels. The intensity level will then be transmitted to the LED drivers in the DMS. The algorithm used to calculate the intensity level should be determined by the manufacturer and tested under real-world lighting conditions.

The intensity control mode, manual or automatic, should be settable via NTCIP using the control software or via the front panel interface. The manual brightness level should be settable via the software or front panel. The mode and brightness level should be monitored from both the software or front panel interfaces.

6.10 System Status Monitoring and Diagnostic Testing

The DMS controller should be capable of monitoring the status of many of the DMS components and subsystems in real-time and/or manual modes, depending on the component or system. The following sections detail the status and diagnostic information that should be provided by the controller. All of this status and diagnostic data should be available via the front panel LCD screen and should be transmitted via NTCIP to control software upon request.

Message Display Status

The DMS controller should be capable of monitoring and displaying the currently active message (if any) including graphical messages on the controller's front panel LCD display. This display should be in a WYSIWYG format.

LED Pixel Testing

Upon command from either the front panel control interface or via NTCIP from remote control software, the sign controller should direct all of the LED modules to perform diagnostic tests of all their pixels and should not disrupt the message being displayed on the DMS to assure motorist safety. The controller should then collect and report the results of the pixel testing.

The controller should also be capable of automatically detecting in real-time the status of each of the display's pixels and reporting their on/off status. This monitoring should take place without interfering with the display of data on the DMS face.

Power Supply Operation

The sign controller should monitor and report the functional status of regulated DC power supplies located in the DMS by monitoring diagnostic outputs located on the supplies. The controller should monitor the output voltage of each power supply and the status of each output. The power supply voltages should be measured and the status should be indicated as pass or fail.

Door States

If the DMS or control equipment cabinet is equipped with access doors and sensors to monitor their open status, the controller should monitor the status of those doors.

Fan Operation

Intake fans should be monitored by the controller and report the status of the fans.

Environmental Conditions

The DMS controller should monitor the readings of all light, temperature, and humidity sensors installed in the DMS housing.

6.11 Error Notification

The DMS sign controller should be capable of automatically informing a maintenance operator (via the local LCD panel) and a central control system (via NTCIP communication) of the occurrence of important events and subsystem failures.

All major component and subsystem errors should be indicated on the controller's LCD front panel.

The controller should be capable of sending event notifications to the central control system via SNMP "traps" as allowed by NTCIP. When one of these events occurs, the sign controller should create a data packet for transmission to the central controller that should contain details about the event. The transmission of traps should be governed by the NTCIP standards. The controller should be configurable to enable or disable the transmission of traps for each event or error type. This configuration will include the automatic initiation of these traps, including establishing telephone modem connections if appropriate, when the NTCIP network permits transmission initiation by the sign controller.

The following sections list errors and events that the controller should report as defined above.

Over Temperature Shutdown

The DMS controller should continuously monitor the DMS housing's temperature sensors and should automatically shut down the DMS if the internal cabinet temperature exceeds a safety threshold.

If the temperature approaches the threshold the controller should reduce the brightness of the sign face. If the temperature continues to increase and exceeds that threshold, the controller should trigger a warning notification event and blank the face of the sign. The sign face will remain blank until the temperature begins to drop. As the temperature drops, the controller will gradually increase the brightness of the display face, eventually returning to full brightness.

The sign controller should employ an algorithm to control the above brightness reductions and increases utilizing hysteresis to ensure that the display face does not visibly flicker as the temperature changes.

The event notifications sent for over temperature situations will include visual indication on the controller's front panel LCD, as well as a trap notification sent to the central control system.

Controller Restart

When the DMS controller detects that it has been restarted due to a manual reset or error condition, it should send a trap notification to the central system. It should also automatically activate the NTCIP reset message if it is configured to do so.

Power Loss

When the DMS controller detects that it has lost power, it should automatically indicate that on the front panel LCD. It should also send a trap notification to the central system and activate the NTCIP power loss message if configured to do so.

Power System Failure

The DMS controller should automatically monitor the major power systems in the sign and detect when one of them has failed. These failures will be reported on the front panel LCD and transmitted to the central system in the form of a trap.

Door Opened

When the sign controller detects that one of the sign cabinet or control cabinet doors has been opened, it should transmit a trap to the central system indicating which door has opened

Communication Loss

The DMS controller should monitor the frequency of communication packets from the central system. If the controller detects that communication has not occurred between the controller and central system for longer than a configurable timeout, then the controller will automatically activate a communication loss message as defined by NTCIP. This communication loss message should be configurable and may be disabled as allowed by NTCIP.

6.12 DMS Controller Standard of Acceptance

Standard of acceptance for DMS Controller: Daktronics Vanguard NTCIP Compliant Sign Controller c/w Vanguard Central Control Software.

SECTION 7 – CABINET MANUFACTURING REQUIREMENTS

7.01 Common Specifications UPS and DMS Control Cabinets

All cabinets should be as shown on the drawings with the following additional specifications:

- Cabinets should be manufactured in accordance with the latest edition of the Ministry Electrical and Signing Material Standards Section 1101 Type B Traffic Controller Cabinet, except as modified by the drawings and these specifications.
- Powder coat must pass minimum 4032 hour salt spray per ASTM B117-11.
- Provide 25mm extruded polystyrene insulated walls, door and ceiling for each cabinet. The insulation should have a minimum R rating of 4.5.
- Provide a fold down shelf permanently fastened to each door for holding testing equipment or documentation.
- Supply all cabinets with a complete set of their respective as-built drawings, manuals, and other pertinent documentation for operation and maintenance, in the plan pouches.
- Enclosures to be welded by CWB certified welders

- Electrical work within the cabinets are to be performed only by Certified Journeyman Electrician
- Electrical contents to be installed per CSA C22.2 No14 industrial control equipment standard
- Electrical enclosure to be certified Type 3R per CSA C22.2 No 94.1&2 or equivalent as approved by electrical safety authority.

7.02 DMS Control Cabinet Standard of Acceptance

The DMS Control Cabinets should be as per the common specifications, above, and as specified on the drawings in addition to the following:
DMS Control Cabinet Standard of Acceptance: Valid Manufacturing PMC553020.

7.03 DMS Control Cabinet Internal Components

The following equipment should be supplied and installed within each Dynamic Message Sign Control Cabinet:

Supply and install one (1) 120V, 30A main circuit breaker.
- Standard of acceptance: Cutler Hammer, Schneider, Siemens, Phoenix Contact or approved alternative.

Supply and install branch circuit breakers in the size and quantity shown on the Drawings.
- Standard of acceptance: Cutler Hammer, Schneider, Siemens, Phoenix Contact or approved alternative.

Supply and install one (1) network switch.
- Standard of acceptance: N-Tron 708TX

Supply and install one (1) IP addressable power strip.
- Standard of acceptance: APC AP7900B.

Supply and install one (1) lightning arrestor connected to incoming power feed as shown on the Drawings.
- Standard of acceptance: Surgepure or approved alternative.

Install only, one (1) City-supplied PoE injector to provide power for the City-supplied Ethernet radio.
Supply and install one (1) PoE surge protectors connected to City-supplied PoE injector.
- Standard of acceptance: Transtector RJ45 PoE – 1101-905.

Supply and install one (1) 120V, 100A, 8 cct, distribution panel fully populated with circuit breakers as specified herein and shown on the Drawings.
- Standard of acceptance: Cutler Hammer, Schneider, Siemens, Phoenix Contact or approved alternative.

Supply and install one (1) 24VDC power supply.
- Standard of acceptance: Phoenix Contact QUINT-PS/1AC/24DC/3.5 – 2866747.

Supply and install one (1) Input/Output web relay module.

- Standard of acceptance: Advantech ADAM I/O 6066.

Supply and install two (2) 120V, 20A Line Filter.

- Standard of acceptance: Corcom 20VR1 or approved alternative.

Supply and install one Ground Fault Receptacle.

- Standard of acceptance: Phoenix Contact EM-DUO/120/15/GFI – 5600462 or approved alternative.

Supply and install two (2) 1P, 2A DC Circuit Breakers.

- Standard of acceptance: Phoenix Contact UT 6-TMC M 2A – 0916605 or approved alternative.

Supply and install terminal blocks for all wiring entering into the cabinet.

Supply and install raceway duct to ensure all wiring is covered and neatly organized within the cabinet.

Supply and install all communications and power wiring required within the cabinet to connect all equipment as per the Drawings and specifications.

UPS Cabinets

The UPS Cabinets and related equipment should be as specified on the drawings in addition to the following additional specifications:

- UPS Cabinets standard of acceptance: Valid Manufacturing KSDA483014-5.
- UPS standard of acceptance: Alpha FXM-2000, UATS (transfer switch), 4 x GXL 195 batteries, Alpha Guard, battery cable kit.

SECTION 8 – GENERAL TERMS AND CONDITIONS

8.01 City Responsibilities

The City of Surrey will be responsible for:

- Review of shop drawings.
- Observing FAT, as required.

8.02 Shipping Details

Ship to: Location in Surrey – To Be Confirmed prior to Notice of Award.

The City reserves the right to arrange for freight pick up outside of this agreement, as such, bids should include a separate line for shipping. If goods are picked up, the quoted freight rates will not be included in the Contractors invoice(s).

8.03 Material Replacement Warranty

The DMS and UPS cabinet enclosure, finish and all related cabinet components should be warranted to be free of defects for a period of ten (10) years from the date of shipping.

The DMS should be warranted to be free of defects for a period of two (2) years from the date of shipping.

All other components not identified above should include a minimum one (1) year warranty on materials.

8.04 Schedule

- All goods must be delivered within 12 weeks of Notice of Award.
- Cabinets, DMS, including the control assemblies, must be Factory Acceptance Tested, configured and shipped
- The Contractor should submit completed Factory Acceptance Test documentation within 10 weeks of Notice of Award.

8.05 Shop Drawing Schedule

The Contractor should submit shop drawings and data sheets for review and approval by the City's Representative for all supplied equipment and assemblies.

The Contractor should submit detailed signed and sealed shop drawings, from a Professional Engineer registered with Engineers and Geoscientists BC, for review and approval by the City's Representative, for all overhead sign pole structure materials including the sign mounting clamps and sign assembly.
The shop drawings should be submitted a maximum of two (2) weeks from Notice of Award.
The Contractor should provide a schedule outlining the production schedule for all Contractor-supplied material. This schedule should include dates for powder coating and galvanizing (where applicable), FAT, and delivery.

Prior to submission to the City's Representative, the Contractor should review all shop drawings and product data/information sheets. By this review, the Contractor has determined and verified all measurements, criteria, materials, catalogue numbers and similar data, and that each shop drawing and product data sheet has been checked and coordinated with the requirements of the work and of the Plans. Stamp, date and signature of the responsible engineer should indicate the Contractor's review of each shop drawing and product data/information sheets.

The Contractor is responsible for quantities and dimensions meeting all requirements of the Contract, for information that pertains solely to fabrication processes, and for techniques of construction and installation.

The Contractor should submit electronic copies of all shop drawings.

No separate payment will be made for shop drawings and the cost thereof will be considered incidental to the various items of work to be performed by the Contractor.

8.06 Factory Acceptance Testing (FAT)

The Contractor should conduct Factory Acceptance Testing (FAT) and provide quality control to assure that the Work strictly complies with the Contract requirements. The City at their discretion may witness the FAT conducted by the manufacturer, in which case, the Contractor should provide an indoor, climate-controlled facility in the Province of BC for the City representative to observe FAT.

The Contractor should develop detailed test plans and test documentation, for the FAT, to demonstrate conformance with the Contract requirements.

The FAT for the Cabinets, DMS, and UPS should include basic testing of all individual components and wiring prior to field installation. Include (as a minimum) provisions for the testing of the following in the FAT Testing checklists:

- Correct cabinet nameplate is affixed
- Devices common to all locations are installed as per the Drawings
- All components, terminals, wires and cables are correctly labelled as per the Drawings
- Verify power-up of all branch circuits and devices
- Verify network communications to all network-enabled devices
- Verify basic device operation
- Where not verifiable through device operation, verify all wiring by point-to-point testing of all conductors between devices as shown on the Drawings
- Verify operation of fans, lights, heater and door switch

In addition to the tests noted above, for DMS include (as a minimum) the following tests:

- Sign controller is correctly configured for the size and type of display modules
- Run pixel diagnostics test and confirm correct operation of all pixels
- Confirm correct operation of the photocell
- Confirm correct display of messages

The proposed test plans should be submitted, for review by the City representative, at least 2 weeks prior to commencement of FAT. The FAT test plan should be followed for each cabinet and sign. FAT checklist should be completed at the time of testing with remedies and corrections noted. FAT documentation should be completed by the personnel conducting the tests. Submit complete documentation of completed and successful FAT to the City Representative.

SCHEDULE A-1 – Drawings

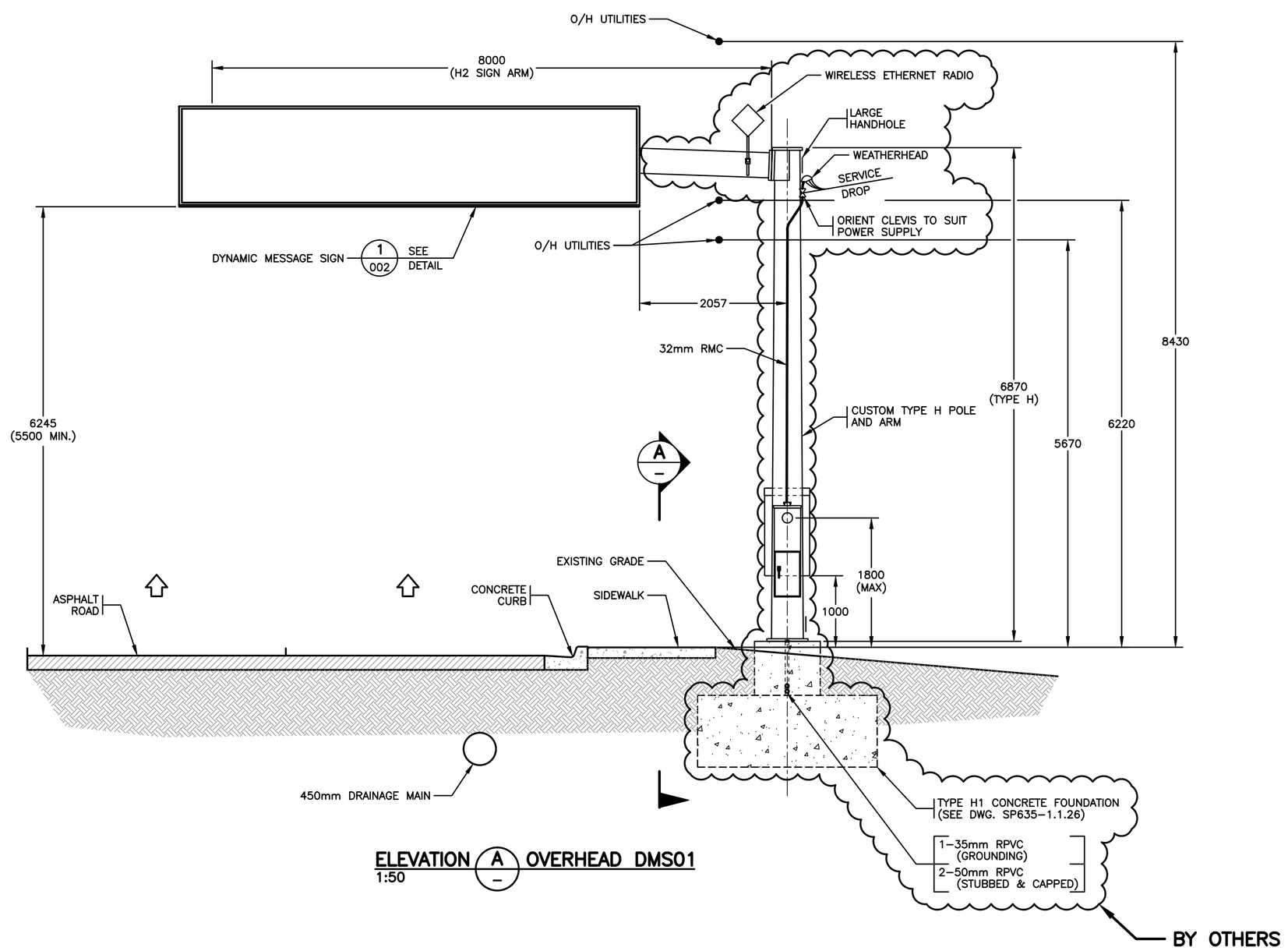

ELEVATION A OVERHEAD DMS01
1:50

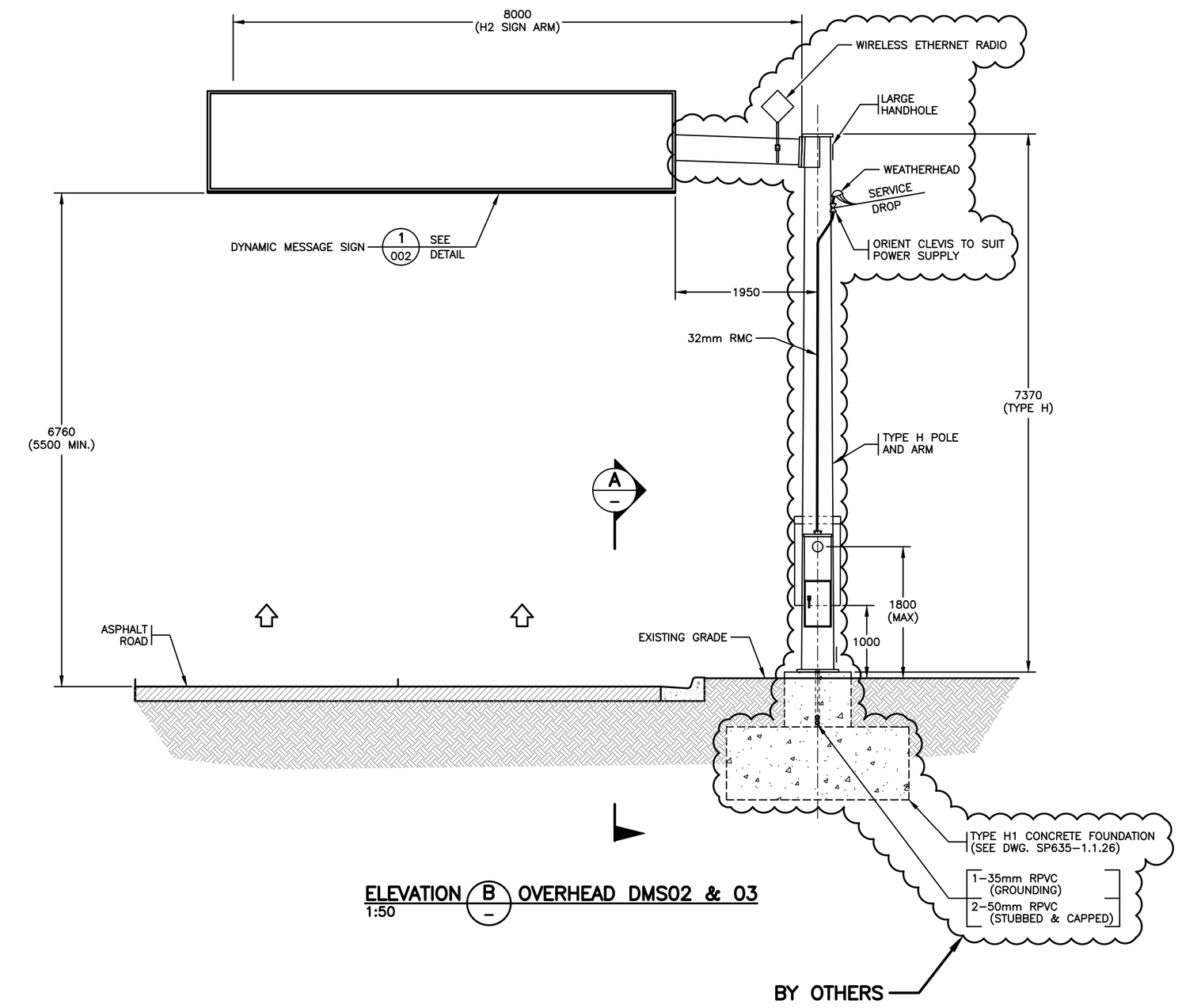

ELEVATION B OVERHEAD DMS02 & 03
1:50

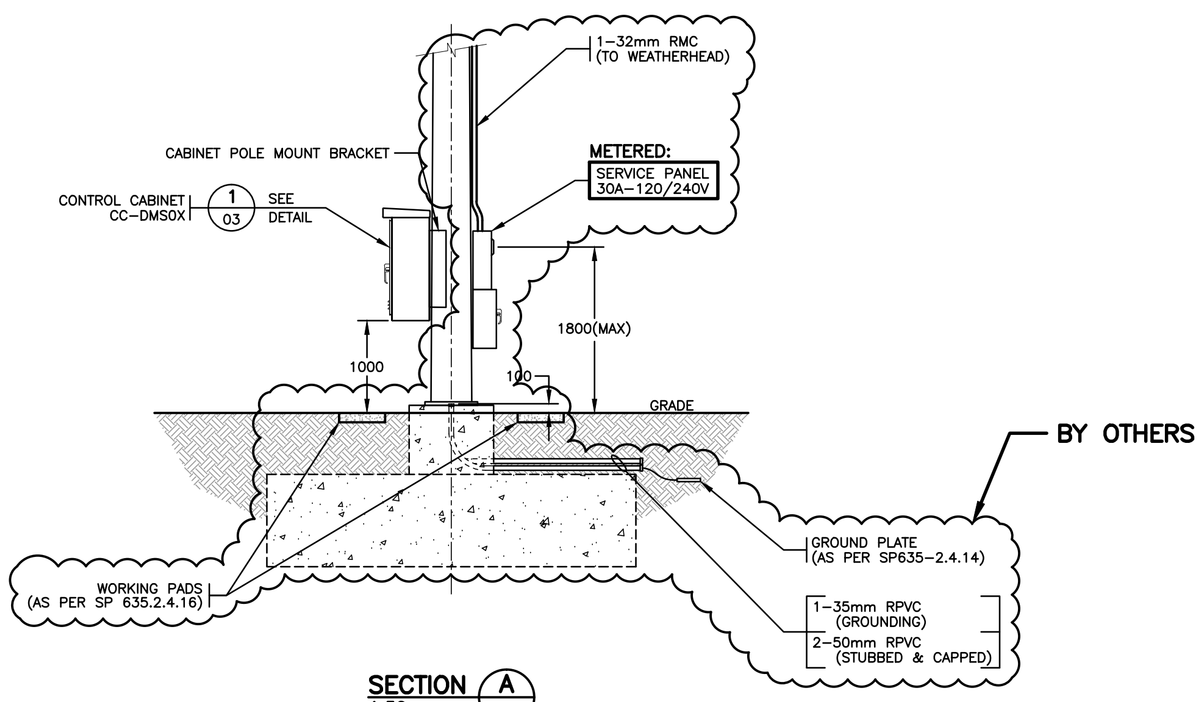

SECTION A
1:50

NOTES:

1. EQUIPMENT INSTALLATION BY OTHERS.
2. UPS CABINET NOT SHOWN FOR CLARITY.

0 1:50 2.5

SEE THE MINISTRY OF TRANSPORTATION AND INFRASTRUCTURE'S "STANDARD SPECIFICATIONS FOR HIGHWAY CONSTRUCTION" FOR APPLICABLE STANDARD DRAWINGS

NOT FOR CONSTRUCTION

ALL EQUIPMENT IS PROPOSED UNLESS NOTED OTHERWISE

PBX ENGINEERING Ltd.
Suite 300 - 131 Water St.
Vancouver BC, V6B 4M3 Tel 604.408.7222
www.pbxeng.com

CAD FILENAME E001.dwg

REV	DATE	REVISIONS	DRAWN
A	18MAY15	ISSUED FOR ITQ	PBX

CITY OF SURREY
the future lives here.

CITY OF SURREY
TRAVEL TIME INFORMATION SYSTEM (TTIS)
ELECTRICAL – DMS ITQ

ELEVATION – DMS

IAN STEELE P.ENG
ELECTRICAL ENGINEER OF RECORD
(FOR CURRENT REVISION)
DATE

DESIGNED RV DATE 18MAY08
QUALITY CONTROL FV DATE 18MAY08
QUALITY ASSURANCE IS DATE 18MAY09
TRAN ELECTRICAL DESIGN REVIEW DATE

SHEET NUMBER	SITE CODE	HWY DIST	REG	DRAWING NUMBER
SHEET OF				E001 A

CANCEL PRINTS BEARING PREVIOUS LETTER

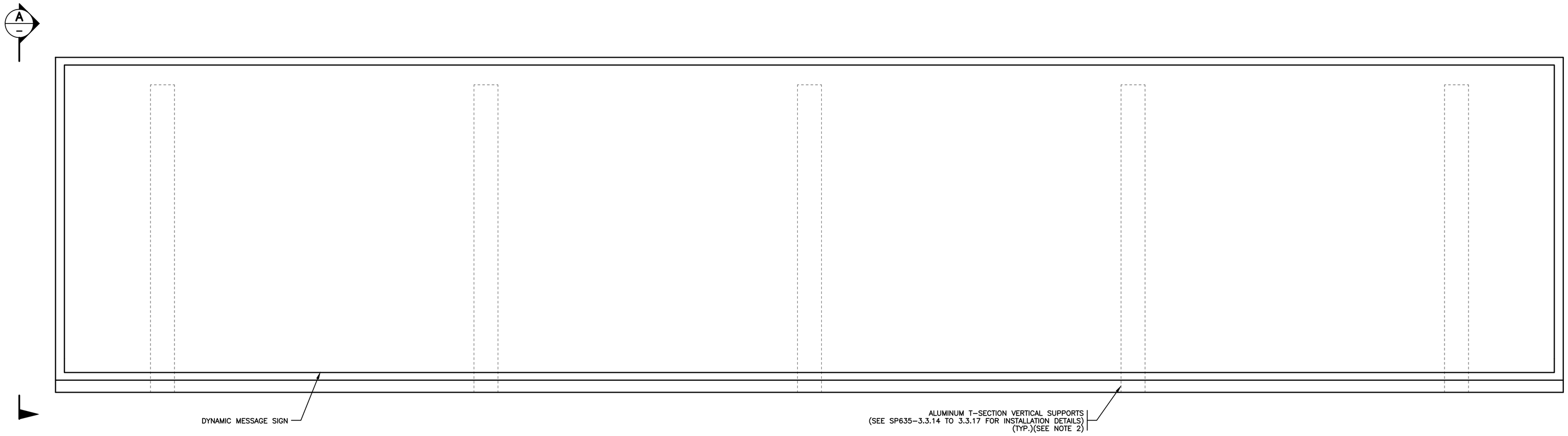

DETAIL 1 DMS SIGN (FRONT)
1:10

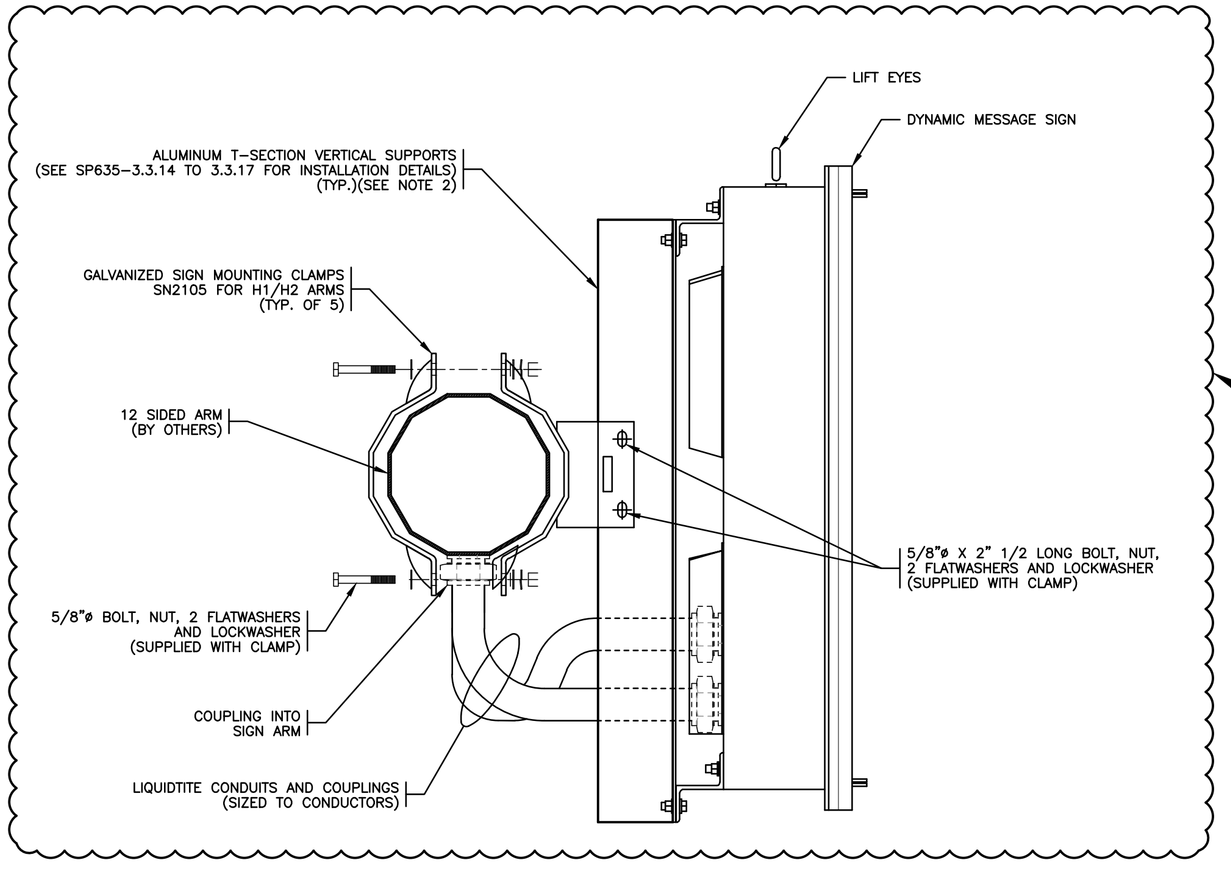

FOR INFORMATION ONLY.
CONTRACTOR TO PROVIDE
ENGINEERED SHOP DRAWINGS
OF COMPLETE ASSEMBLY
TO ENGINEER FOR APPROVAL.

SECTION A DMS MOUNTING
1:10

NOT FOR CONSTRUCTION

ALL EQUIPMENT IS PROPOSED
UNLESS NOTED OTHERWISE

NOTES:

1. EQUIPMENT INSTALLATION BY OTHERS.
2. ADJUST QUANTITY AND LOCATION TO SUIT ALL MOUNTING LOCATIONS ON BACK OF SIGN.

0 1:10 500mm

SEE THE MINISTRY OF TRANSPORTATION AND INFRASTRUCTURE'S
"STANDARD SPECIFICATIONS FOR HIGHWAY CONSTRUCTION"
FOR APPLICABLE STANDARD DRAWINGS

PBX ENGINEERING Ltd.
Suite 300 - 131 Water St.
Vancouver BC, V6B 4M3 Tel 604.408.7222
www.pbxeng.com

CAD FILENAME E002.dwg

REV	DATE	REVISIONS	DRAWN
A	18MAY15	ISSUED FOR ITQ	PBX

CITY OF SURREY
the future lives here.

CITY OF SURREY
TRAVEL TIME INFORMATION SYSTEM (TTIS)
ELECTRICAL – DMS ITQ

SIGN MOUNTING DETAILS

IAN STEELE P.ENG
ELECTRICAL ENGINEER OF RECORD
(FOR CURRENT REVISION)
DATE

DESIGNED RV DATE 18MAY08
QUALITY CONTROL FV DATE 18MAY08
QUALITY ASSURANCE IS DATE 18MAY09
TRAN ELECTRICAL DESIGN REVIEW DATE

SHEET NUMBER	SITE CODE	HWY DIST	REG	DRAWING NUMBER
SHEET OF				E002 A

CANCEL PRINTS BEARING PREVIOUS LETTER

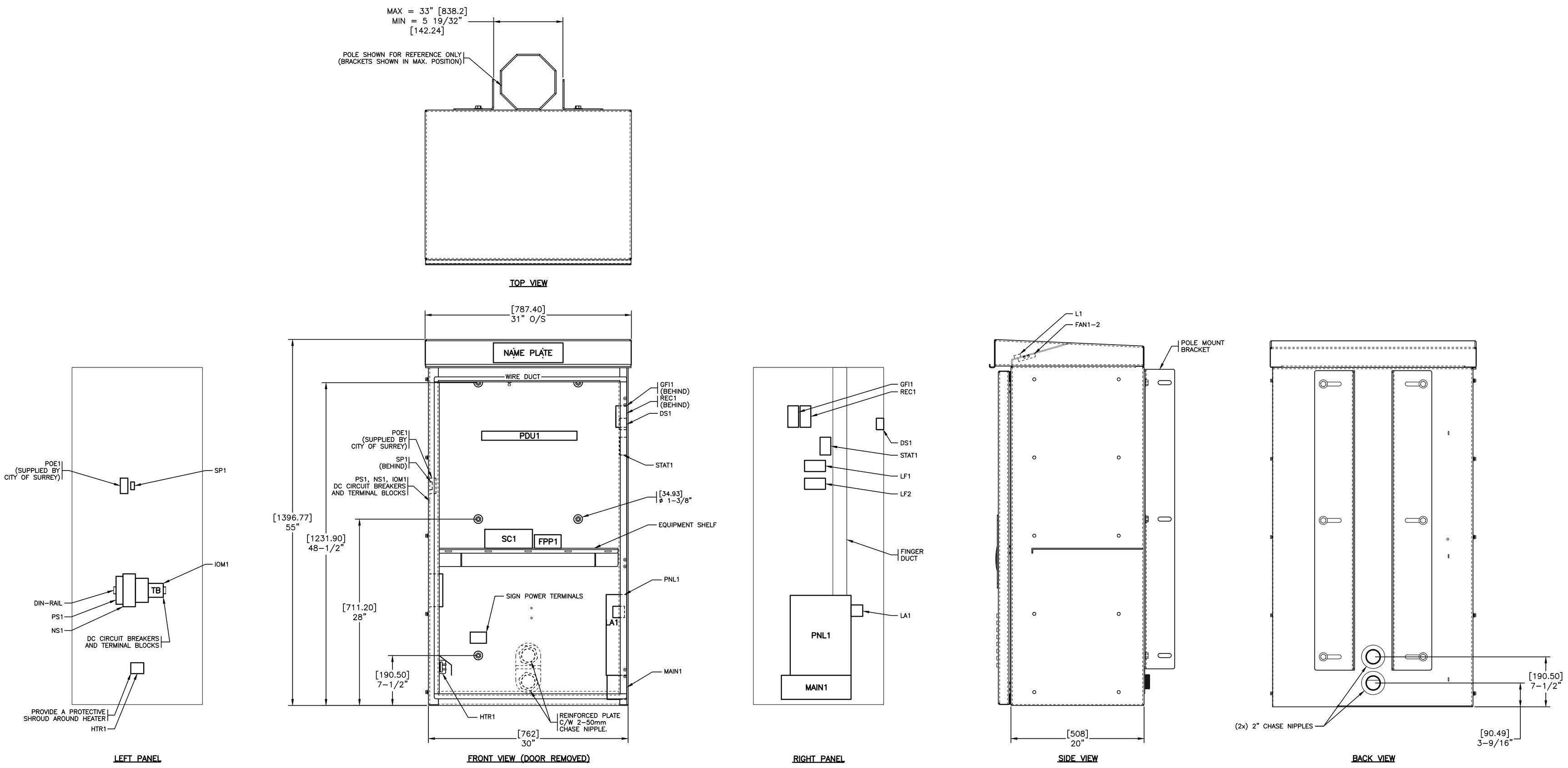

DETAIL 1 DMS CONTROL CABINET
N.T.S.

DMS CABINET EQUIPMENT LIST – STANDARD COMPONENTS

REFERENCE	QTY	DESCRIPTION
DC CIRUCUIT BREAKERS	2	1P, 2A DC CIRCUIT BREAKERS, PHOENIX CONTACT 0916605
DS1	1 1	DOOR SWITCH COVER
FAN1–2	2	VENTILATION FAN
GFI1	1	GROUND FAULT RECEPTACLE C/W JUNCTION BOX
HTR1	1 2 1	350W, 120V STRIP HEATER CERAMIC TERMINAL COVERS HEATER PROTECTIVE SHROUD
L1	AS REQ.	LED STRIP LIGHTING
LA1	1	LIGHTNING ARRESTOR
LF1–2	2	LINE FILTER
MAIN1	1	MAIN BREAKER ENCLOSURE DIN MOUNT 1P, 30A BREAKER
PNL1 BREAKERS	1 AS REQ.	8CCT. LOAD CENTRE CIRCUIT BREAKERS
PS1	1	24VDC, 3.5A POWER SUPPLY
REC1	1	DUPLEX RECEPTACLE C/W JUNCTION BOX
SC1	1	DMS SIGN CONTROLLER
STAT1	1	HEATING/COOLING THERMOSTAT

NOTES:

1. CABINET DOORS, WALLS AND ROOF TO INCLUDE 25mm EXTRUDED POLYSTYRENE INSULATION HAVING A MINIMUM RATING OF 4.5R.
2. DOOR TO HAVE FOLD DOWN EQUIPMENT SHELF AND DOCUMENT POUCH.
3. CABINET HANDLES TO BE PAD LOCKABLE.
4. REFER TO SHEET E004 FOR SINGLE LINE DIAGRAM AND BREAKER REQUIREMENTS.
5. REFER TO MoTI SPECIFICATIONS SP635–2.7.3 FOR CABINET MOUNTING DETAILS.
6. PROVIDE SHOP DRAWINGS AND DATA SHEETS FOR ALL EQUIPMENT.
7. EQUIPMENT MOUNTING LOCATIONS ARE SUGGESTED ONLY. ADJUST LOCATION FOR BEST FIT. PROVIDE PROPOSED LOCATIONS ON CABINET SHOP DRAWINGS.
8. CABINET TO INCLUDE LAMACOID NAME PLATE MOUNTED AS SHOWN.

DMS CABINET EQUIPMENT LIST – COMMUNICATIONS COMPONENTS

ITEM No.	DESCRIPTION	MANUFACTURER	MANUFACTURER PART No.	REFERENCE	QTY
1	WIRELESS ETHERNET RADIO	ENCOM WIRELESS	E–LITE 5GHz	ETH1	1
2	POE INJECTOR	TYCON	TP–POE–18G	POE1	1
3	MANAGED ETHERNET SWITCH, 8 COPPER PORTS	N–TRON	708TX	NS1	1
4	6–CH DIGITAL INPUT/6–CH OUTPUT WEB RELAY MODULE	ADVANTECH	ADAM–6066	IOM1	1
5	15A, 120V IP–ADDRESSABLE 8–OUTLET POWER STRIP	APC	AP7900B	PDU1	1
6	SURGE PROTECTOR, PoE, 60VDC, DIN–MOUNT	TRANSTECTOR	1101–905	SP1	1
7	PATCH CORD, COPPER CAT5E, LENGTH AS REQUIRED (IOM1, SC1, PDU1, POE1, SP3)	–	–	–	5

SUPPLIED BY CITY OF SURREY

SEE THE MINISTRY OF TRANSPORTATION AND INFRASTRUCTURE'S "STANDARD SPECIFICATIONS FOR HIGHWAY CONSTRUCTION" FOR APPLICABLE STANDARD DRAWINGS

NOT FOR CONSTRUCTION

ALL EQUIPMENT IS PROPOSED UNLESS NOTED OTHERWISE

PBX ENGINEERING
PBX ENGINEERING Ltd.
Suite 300 - 131 Water St.
Vancouver BC, V6B 4M3 Tel 604.408.7222
www.pbxeng.com

CAD FILENAME E003.dwg

REV	DATE	REVISIONS	DRAWN
A	18MAY15	ISSUED FOR ITQ	PBX

CITY OF SURREY
the future lives here.

CITY OF SURREY
TRAVEL TIME INFORMATION SYSTEM (TTIS)
ELECTRICAL – DMS ITQ

DMS CONTROL CABINET DETAILS

IAN STEELE P.ENG
ELECTRICAL ENGINEER OF RECORD (FOR CURRENT REVISION)
DATE

DESIGNED RV DATE 18MAY08
QUALITY CONTROL FV DATE 18MAY08
QUALITY ASSURANCE IS DATE 18MAY09
TRAN ELECTRICAL DESIGN REVIEW DATE

SHEET NUMBER	SITE CODE	HWY DIST	REG	DRAWING NUMBER
SHEET OF				E003 A

CANCEL PRINTS BEARING PREVIOUS LETTER

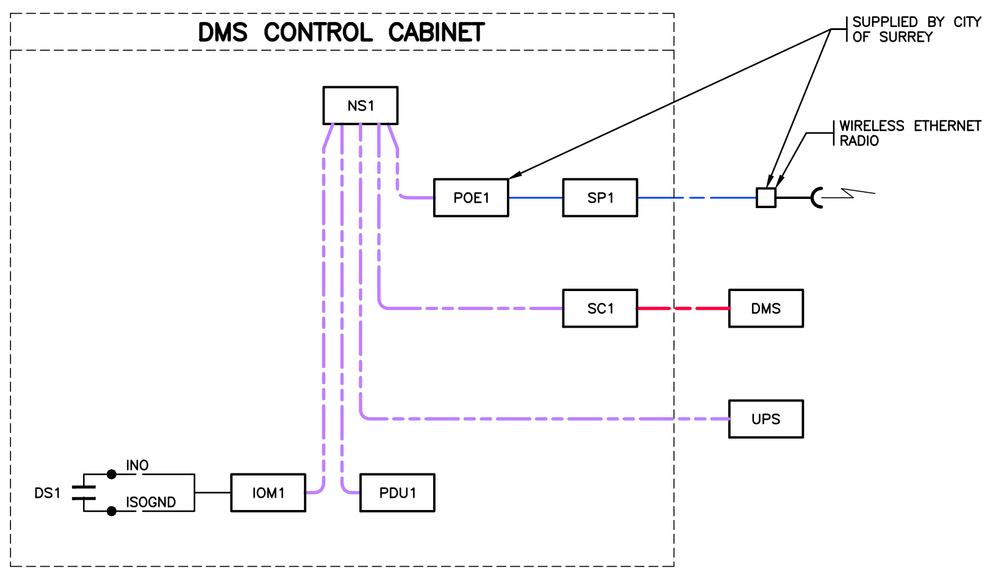

NETWORK DIAGRAM
N.T.S.

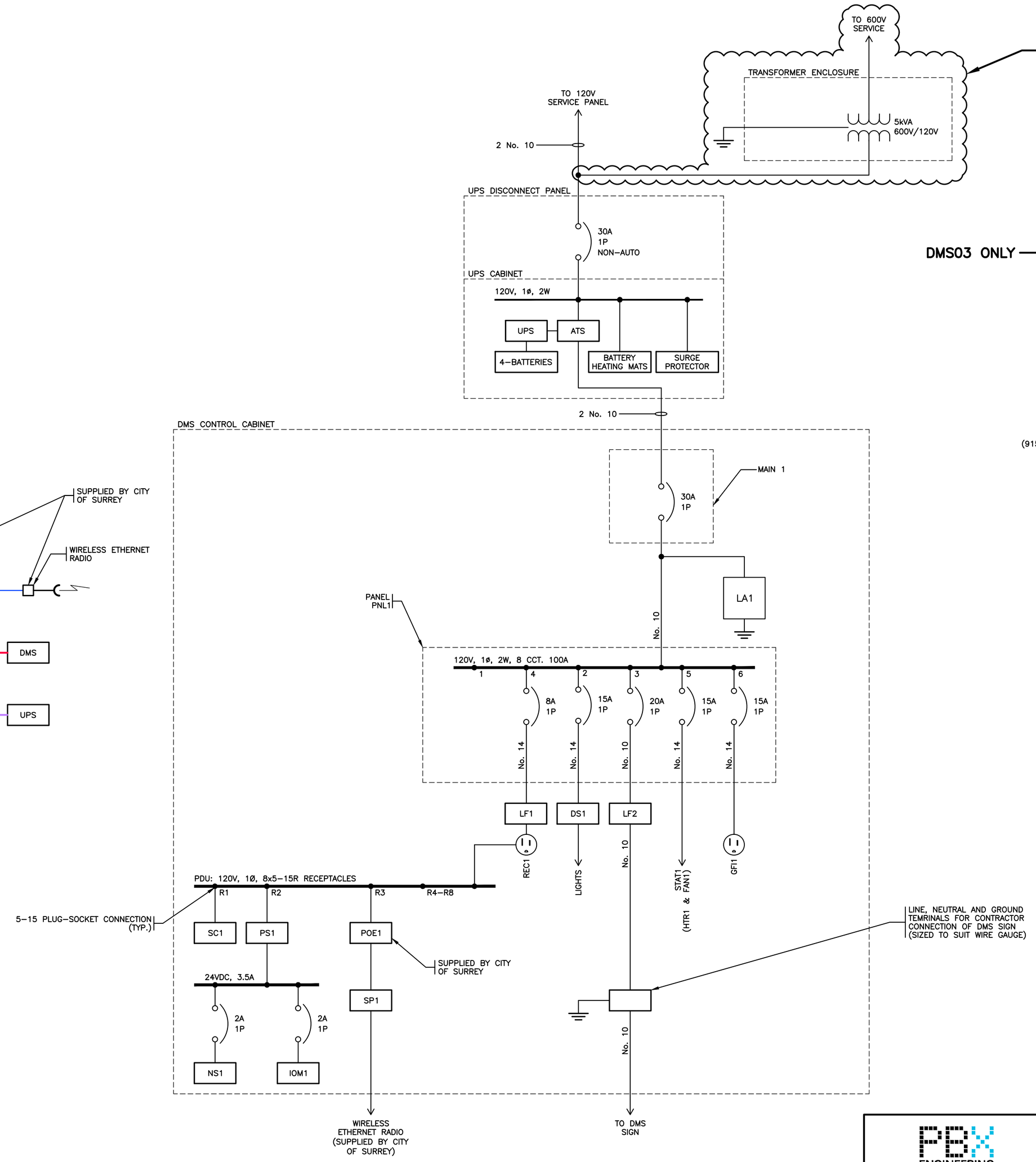

TYPICAL SINGLE LINE DIAGRAM
N.T.S.

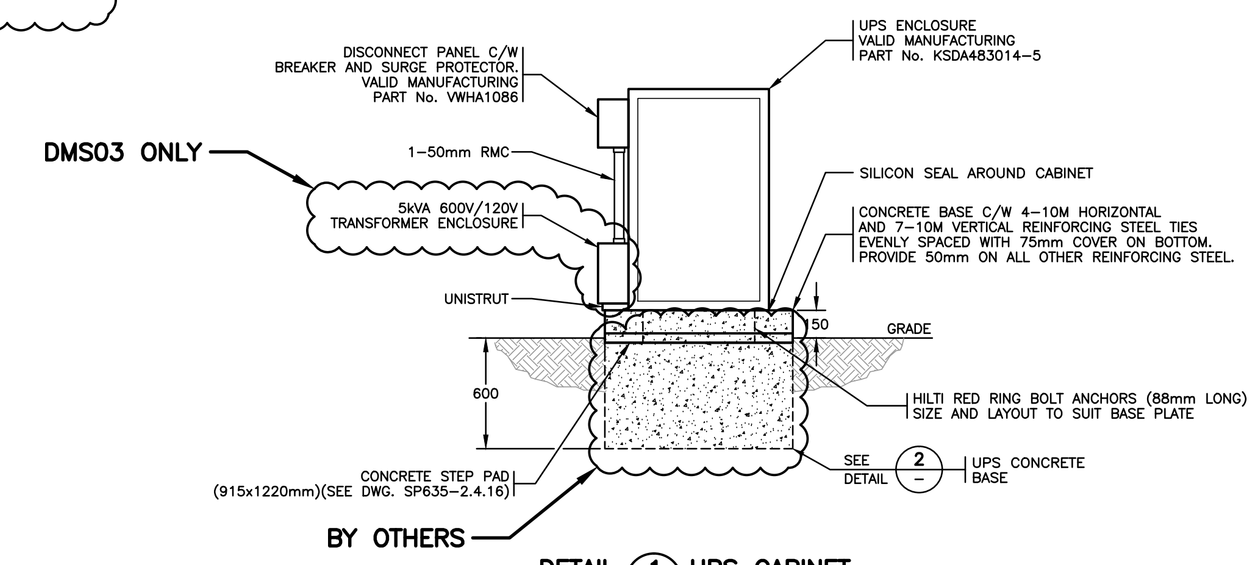

DETAIL 1 UPS CABINET
1:25

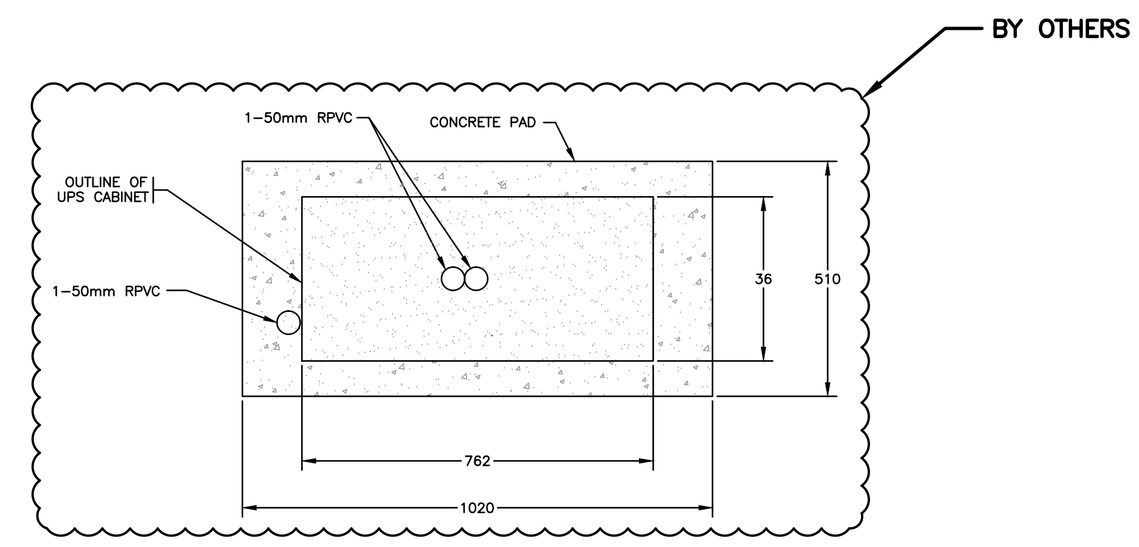

DETAIL 2 UPS CONCRETE BASE
1:10

NOTES:

1. FIELD WIRING BY OTHERS.

CABLE LEGEND
ETHERNET (CAT 6 UTP/CAT 5E)
FIBRE
POE CABLE
CONTROL CABLE

0 1:25 1
0 1:10 500mm

BC OneCall Call before you dig

SEE THE MINISTRY OF TRANSPORTATION AND INFRASTRUCTURE'S "STANDARD SPECIFICATIONS FOR HIGHWAY CONSTRUCTION" FOR APPLICABLE STANDARD DRAWINGS

NOT FOR CONSTRUCTION

ALL EQUIPMENT IS PROPOSED UNLESS NOTED OTHERWISE

PBX ENGINEERING

PBX ENGINEERING Ltd.
Suite 300 - 131 Water St.
Vancouver BC, V6B 4M3 Tel 604.408.7222
www.pbxeng.com

CAD FILENAME E004.dwg

REV	DATE	REVISIONS	DRAWN
A	18MAY15	ISSUED FOR ITQ	PBX

CITY OF SURREY
the future lives here.

CITY OF SURREY
TRAVEL TIME INFORMATION SYSTEM (TTIS)
ELECTRICAL – DMS ITQ

SINGLE LINE DIAGRAM, NETWORK DIAGRAM AND UPS CABINET DETAILS

IAN STEELE P.ENG
ELECTRICAL ENGINEER OF RECORD (FOR CURRENT REVISION)
DATE

DESIGNED RV DATE 18MAY08
QUALITY CONTROL FV DATE 18MAY08
QUALITY ASSURANCE IS DATE 18MAY09
TRAN ELECTRICAL DESIGN REVIEW DATE

SHEET NUMBER	SITE CODE	HWY DIST	REG	DRAWING NUMBER
SHEET OF				E004 A

CANCEL PRINTS BEARING PREVIOUS LETTER

SCHEDULE B – FORM OF QUOTATION

RFQ Title: Supply and Delivery of Three (3) (More or Less) Dynamic Messaging Signs

RFQ No: 1220-040-2018-039

CONTRACTOR

Legal Name: _____

Contact Person and Title: _____

Business Address: _____

Business Telephone: _____

Business Fax: _____

Business E-Mail Address: _____

CITY OF SURREY

TO:

City Representative: Richard D. Oppelt, Purchasing Manager

Address: Surrey City Hall
Finance & Technology Department – Purchasing Section
Reception Counter, 5th Floor West
13450 – 104th Avenue, Surrey, B.C., V3T 1V8

Telephone: 604-590-7274
Email: purchasing@surrey.ca

1. The Contractor offers to supply to the City of Surrey the Goods for the prices plus applicable taxes as follows:

F.O.B. Destination Freight Prepaid	**Payment Terms**: A cash discount of ____% will be allowed if invoices are paid within ___ days, or the ___ day of the month following, or net 30 days, on a best effort basis.	**Ship Via:**

Item #	**Item Name**	**Completion Time**	**Quantity**	**U/M**	**Unit Price**	**Total Amount**
					Subtotal:	$
					GST (5%):	$
					PST (7%):	$
CURRENCY: Canadian					**TOTAL:**	**$**

2. In addition to the warranties provided in the Draft Quotation Agreement, this Quotation includes the following warranties:

_____

_____

3. I/We have reviewed the RFQ Attachment 1, Schedule A – Specifications of Goods and if requested by the City, I/we would be prepared to meet those requirements, amended by the following departures and additions (list, if any):

Requested Departure(s) / Alternative(s) / Addition(s)

_____

_____

The City is not obligated to accept any alternatives. The City will determine what constitutes acceptable deviations and overall best value.

4. If this Quotation is accepted by the City, a contract will be created as described in:
   (a) the Agreement;
   (b) the RFQ; and
   (c) other terms, if any, that are agreed to by the parties in writing.

5. Capitalized terms used and not defined in this Quotation will have the meanings given to them in the RFQ. Except as specifically modified by this Quotation, all terms, conditions, representations, warranties and covenants as set out in the RFQ will remain in full force and effect.

6. I/We have reviewed the RFQ Attachment 1 – Draft Quotation Agreement. If requested by the City, I/we would be prepared to enter into that Agreement, amended by the following departures (list, if any):

Section	**Requested Departure(s) / Alternative(s)**

[END OF PAGE]

7. **I/We the undersigned duly authorized representatives of the Contractor, having received and carefully reviewed the RFQ including without limitation the specifications and the General Terms and Conditions, submit this Quotation in response to the RFQ.**

This Quotation is offered by the Contractor this _____ day of _____, 201_.

CONTRACTOR

I/We have the authority to bind the Contractor

_____
(Legal Name of Contractor)

_____	_____
(Signature of Authorized Signatory)	(Signature of Authorized Signatory)
_____	_____
(Print Name and Position of Authorized Signatory)	(Print Name and Position of Authorized Signatory)

This Quotation is accepted by the City this _____ day of _____, 201_.

CITY OF SURREY

_____	_____
(Signature of Authorized Signatory)	(Signature of Purchasing Representative
_____	_____
(Print Name and Position of Authorized Signatory)	(Print Name of Purchasing Representative)

_____
(Signature of Authorized Signatory)

_____
(Print Name and Position of Authorized Signatory)